USER MANUAL

TDR5-P eco
TDR7-P eco
TDR8-P eco

WARNING
Read the instructions before using the machine.

KEEP THIS USER MANUAL FOR FUTURE USE

© 2020 Fri-Jado BV, Oud Gastel, The Netherlands.

We advise you to contact your supplier for the guarantee period and conditions. Further we refer to our General Terms and Conditions for Sales and Delivery that are available upon request.
The manufacturer does not accept any liability for damage or injury caused by failing to adhere to these regulations or by not observing the usual caution or care in actions, operation, maintenance or repair activities, even if not explicitly described in this manual.
As a result of constant commitment to improvement, it may happen that your unit deviates in detail from what is described in this manual. For this reason, the given instructions are only a guideline for the installation, use, maintenance and repair of the unit referred to in this manual.
This manual has been composed with the utmost care. The manufacturer shall, however, not be held responsible for any mistakes in this manual nor for any consequences thereof.
The user is allowed to copy this manual for own use. Further all rights are reserved and nothing in this manual may be reproduced and/or made public in any way.

Modifications:
In case of unauthorized modifications in or on the unit, every liability on the part of the manufacturer becomes null and void.

Empty page.

CONTENTS

1. INTRODUCTION 6
1.1 General 6
1.2 Identification of the unit 6
1.3 Pictograms and symbols 6
1.4 Safety instructions 7
1.4.1 General 7
1.4.2 Moving 8
1.4.3 Outdoor use restrictions 8
1.5 Hygiene 9
1.6 Service and technical support 9
1.7 Storage 9
1.8 Disposal 9
2. DESCRIPTION OF THE UNIT 10
2.1 Technical description 10
2.2 Intended use 10
2.3 Accessories 10
3. INSTALLATION AND FIRST USE 11
3.1 Unpacking the unit 11
3.2 Dismantling the pallet 12
3.3 Installation and positioning 12
3.4 First use program 13
3.4.1 Metal odor 14
4. OPERATION AND USE 15
4.1 Control Panel 15
4.2 Switching-on the unit 16
4.3 Loading the unit 16
4.3.1 Loading the rotisserie using meat forks 16
4.3.2 Loading the rotisserie using V-shape spits (accessory) 18
4.3.3 Loading the rotisserie using meat baskets (accessory) 18
4.3.4 Loading the rotisserie using two different accessories. 19
4.4 Grilling time 19
4.5 Taking out the products 19
4.5.1 Taking out the meat forks 19
4.5.2 Taking out the V-shape spit (accessory) 19
4.5.3 Taking out the meat basket (accessory). 20
4.6 Emptying grease drawer 20
4.7 Switching-off the unit 20
5. OPERATION 21
5.1 Operation of the rotisserie 21

5.2 Operation options ... 23
5.2.1 Pre-heat function ... 23
5.2.2 Continues pre-heat function ... 23
5.2.3 To end a running program. ... 24
5.2.4 Check the actual temperature ... 24
5.2.5 Check the remaining time in a program ... 25
5.2.6 Show all actual program information ... 25
5.2.7 Eco function ... 26
5.2.8 Cook correction ... 26
5.2.9 Display information ... 27
6. MANAGER MENU ... 28
6.1 Manager menu items ... 28
6.2 Programming the rotisserie ... 28
6.3 Programming parameters ... 34
6.4 Change pin code ... 36
6.5 Clock ... 36
6.6 Transfer ... 36
6.7 Version ... 36
6.8 USB ... 37
7. CLEANING AND MAINTENANCE ... 38
7.1 Maintenance schedule ... 38
7.2 Daily Cleaning ... 38
7.3 Weekly Cleaning ... 39
7.4 Monthly Cleaning ... 40
7.5 Cleaning guidelines for non-stick coated surfaces ... 41
8. MALFUNCTIONS AND SERVICE ... 42
8.1 Replace the mains cord ... 42
8.2 Replace a lamp ... 43
9. TECHNICAL SPECIFICATIONS ... 44

1. INTRODUCTION

1.1 General

This manual is intended for the user of the TDR-P eco. The features and controls are being described, along with directions for the safest and most efficient use, in order to guarantee a long life of the unit.

All pictograms, symbols and drawings in this manual apply to all available TDR-P eco models.

1.2 Identification of the unit

The identification plate can be found on the outside of the machine, and contains the following data:

- Name of the supplier or the manufacturer
- Model
- Serial number
- Year of construction
- Voltage
- Frequency
- Power consumption

1.3 Pictograms and symbols

In this manual, the following pictograms and symbols are used:

WARNING
Possible physical injury or serious damage to the unit, if the instructions are not carefully followed.

WARNING
Hazardous electrical voltage.

WARNING
Danger of getting injured by hot surfaces.

Suggestions and recommendations to simplify indicated actions.

Recycling symbol.

Direction of view symbol.

1.4 Safety instructions

WARNING
The outside of the unit can be very hot.

WARNING
The maximum load on top of the unit may never exceed 50 kg (110 lbs.).

WARNING
Risk of slippery floor: Spills may cause slippery surfaces, clean-up promptly

WARNING
See installation instructions for grounding requirements.

WARNING
Always use the brakes on both front wheels:

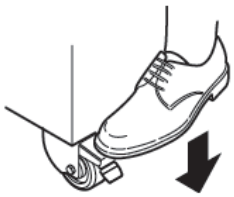

1.4.1 General

The user of the unit will be fully responsible for abiding the locally prevailing safety- rules and regulations.
The unit may be operated by qualified and authorized persons only. Anyone working on or with this unit must be familiar with the contents of this manual and carefully follow all guidelines and instructions. Never change the order of the steps to be performed. The management must instruct the personnel on the basis of this manual and follow all instructions and regulations.

The pictograms, labels, instructions and warning signs attached to the unit, are part of the safety measures. They may never be covered or removed, and have to be clearly visible during the entire lifetime of the unit.
Immediately repair or replace damaged or illegible pictograms, warnings and instructions.

- To avoid short-circuiting, never clean the unit using a water hose. For cleaning instructions, see section 7.
- During the grilling process, the unit can get very hot.
- When the door is opened the rotor stops and the heater is de-energized.
- The unit must be cleaned regularly to ensure proper functioning and prevent fire hazard (over heating). Especially the back of the fan plate.
- The fat collecting drawer must be emptied regularly, to prevent overflow.
- This appliance can be used by children aged from 8 years and above and persons with reduced physical, sensory or mental capabilities or lack of experience and knowledge if they have been given supervision or instruction concerning use of the appliance in a safe way and understand the hazards involved.
- Children shall not play with the appliance.
- Cleaning and user maintenance shall not be made by children without supervision.

1.4.2 Moving

When moving the unit:

- Before moving the unit, first switch off the mains voltage by pulling the plug from the wall socket and empty the fat collecting drawer. After that, cool-down the unit for at least ten minutes.
- The units equipped with wheels are not suited to pass ledges or obstacles higher than 10 mm (0.4 inch).
- When moving the unit, always push at the center of the unit. Never on top. Never at the bottom.
- Make sure that the wheels can move freely, so they never touch the power lead.

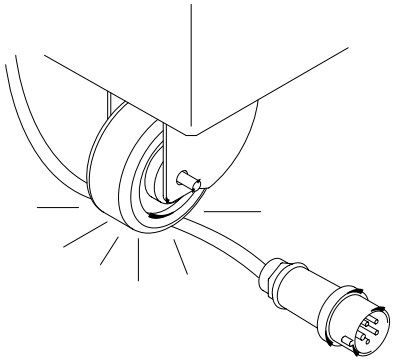

1.4.3 Outdoor use restrictions

To avoid short-circuiting, the units may not be used outdoors unprotected. Placing under a screen is allowed.

1.5 Hygiene

The quality of a fresh product always depends on hygiene. Especially grilling products. With the risk of salmonella contamination – especially for chicken products – you must make sure that grilled products can never be mixed with uncooked products. Also contact between grilled products and hands or tools that have been in contact with raw chicken meat, must be avoided at all times.
Hands or tools that have been in contact with raw chicken meat, must be cleaned thoroughly.

1.6 Service and technical support

The electrical schematics of your unit is included. In case of malfunctions you can contact your dealer/service agent. Make sure you have the following data available:

- Model.
- Serial number.

This data can be found on the identification plate.

1.7 Storage

If the unit will not be used temporarily, and will be stored, follow these instructions:

- Clean the unit thoroughly.
- Wrap the unit from getting dusty.
- Store the unit in a dry, non-condensing environment.

1.8 Disposal

Dispose of the machine, any components or lubricants removed from it safely in accordance with all local and national safety and environment requirements.

2. DESCRIPTION OF THE UNIT

2.1 Technical description

The unit uses a combination of direct infra-red radiation and convection heat.
The rotor is being wheeled by a maintenance-free motor with a gear box.
The fan provides an equally divided heat. The glass panes are equipped with a heat reflecting layer to keep the heat inside the grill.

The plating of the unit is made of stainless steel. The product contact parts are made of stainless steel AISI 304 (eventual with PTFE coating).
The mains cable is provided with a plug.

The unit control keeps the temperature inside the unit fixed to level set by the operator. During the entire process, the interior of the unit will be illuminated by halogen lamps.
The control has a capability to store 99 different programs.
Communication through USB enables easy read-out, re-work and creating of programs via a PC. For this, special software is available at Fri-Jado.

2.2 Intended use

The TDR has been designed for grilling meat products. Any other use will not be regarded as intended use.
The manufacturer accepts no liability whatsoever for loss or injury caused by failing to strictly adhere to the safety guidelines and instructions in this manual or due to carelessness during installation, use, maintenance and repair of the unit referred to in this manual and any of its accessories.

Use the unit in perfect technical condition only.

2.3 Accessories

Your unit contains the following standard accessories:

- Meat forks.
- User manual.

For optional accessories see www.frijado.com.

3. INSTALLATION AND FIRST USE

All packing materials used for this unit are suited for recycling.

After unpacking, check the state of the unit. In case of damage, store the packing material, and contact the transporter within fifteen working days after receiving the goods.

3.1 Unpacking the unit

Your unit is packed in a plastic top cover, protective corners and a carton box around it.
All units are placed on a wooden pallet. Around the box there are two tightening straps.

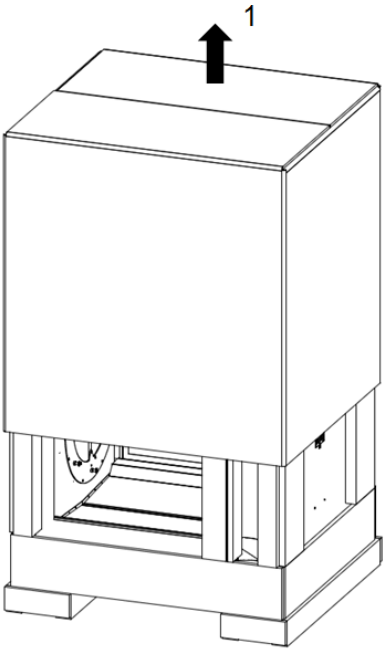

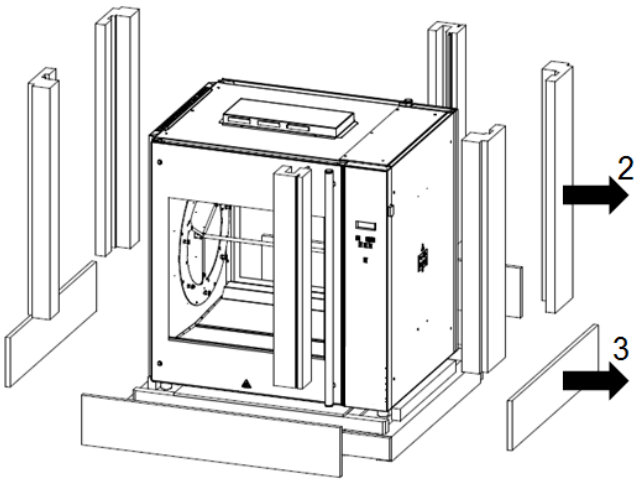

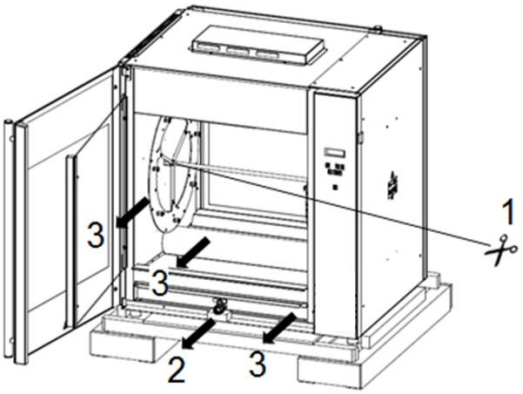

1. Cut the two transportation seals from both sides of the rotor
2. Remove the transportation block of the fat collecting drawer
3. Remove all remaining packing materials from the unit
4. Take off the standard accessories.

3.2 Dismantling the pallet

For proper unpacking the unit, the pallet must be taken apart.

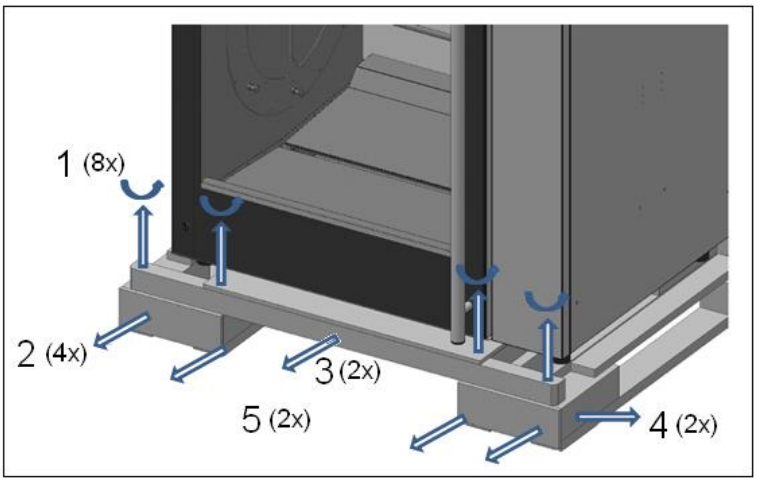

3.3 Installation and positioning

WARNING

Electric chock hazard. Grounding instructions: only connect the appliance to an alternating current provided by a grounded wall socket, with a mains voltage in accordance with the information indicated on the data plate of the appliance.

It is the consumer's responsibility to make sure the electrical installation conforms with current national and local codes and wiring regulations.

Do not use a multi plug or extension cord. Such can result in fire, electrical shock, or other personal injury.

Failure to follow these instructions can result in death or serious injury.

WARNING

Position the unit on a flat and horizontal surface. A temporally inclined plane of maximum 5° is allowed.

- The user must have sufficient freedom of movement to properly operate the unit.

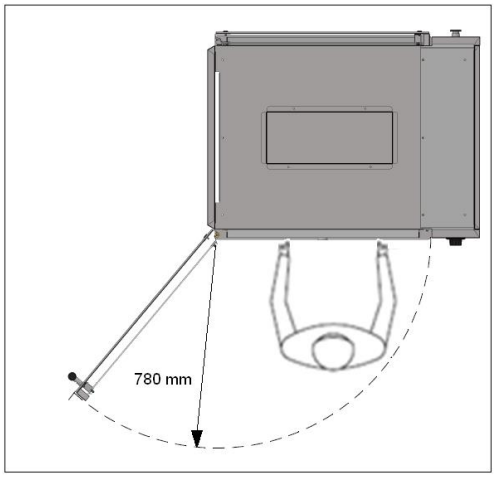

- The minimum free distance must be at least 250 mm (10 inch).
- During grilling, the glass panes will get very hot. While positioning, keep the unit out of children's reach.
- In case of a wheeled unit, the floor must be flat and leveled.
- The unit has a mains plug, and must be connected to a wall socket with the proper mains voltage. The wall socket must be mounted by a certified electrician.

3.4 First use program

When using the unit for the first time, clean the interior thoroughly with soap suds and heat up the unit, see section 3.4.1. After commissioning discoloration of the cooking/grilling area can occur.

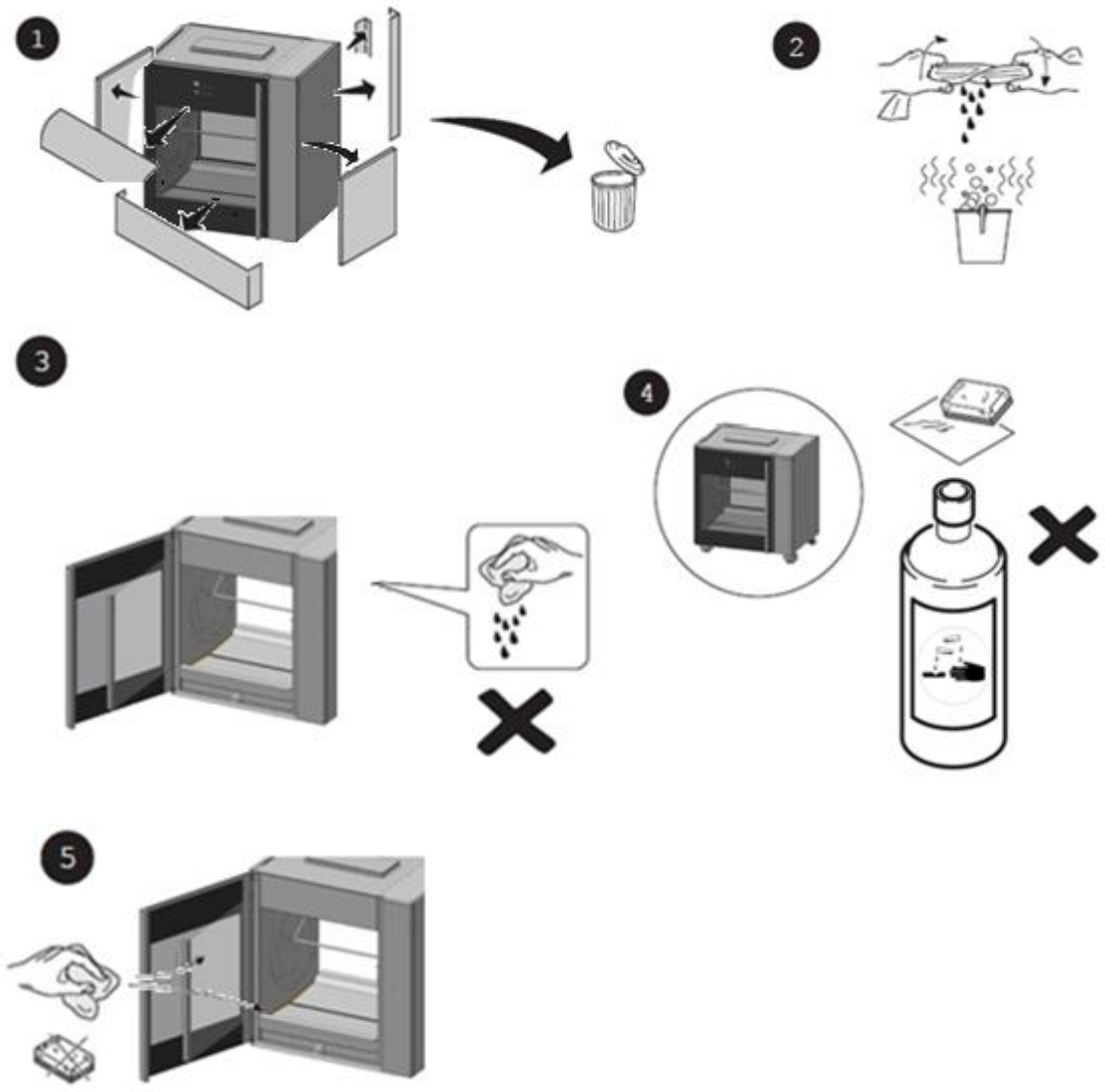

The cleaning remains will find its way to the fat collection drawer, so this drawer must be cleaned and emptied after cleaning the unit.

Place the bottom plates in the grilling compartment.

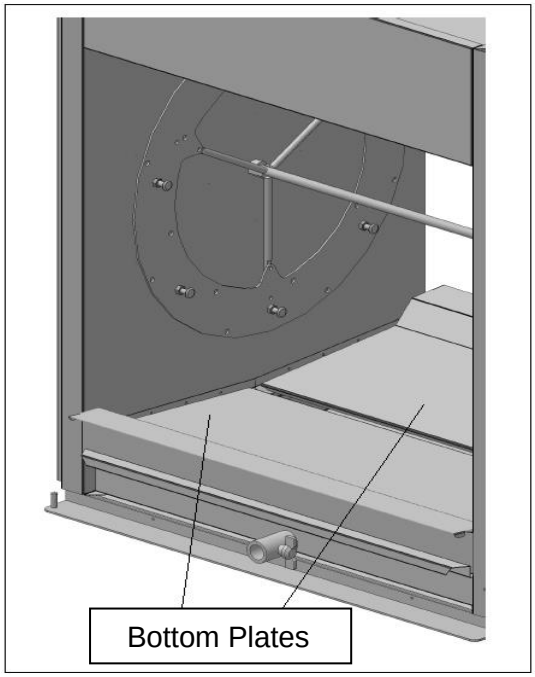

3.4.1 Metal odor

To remove the metal odor that will appear at first use, the unit must be heated at the maximum temperature (250°C/482°F) for at least half an hour (a “first use” program is pre-set at position 99).

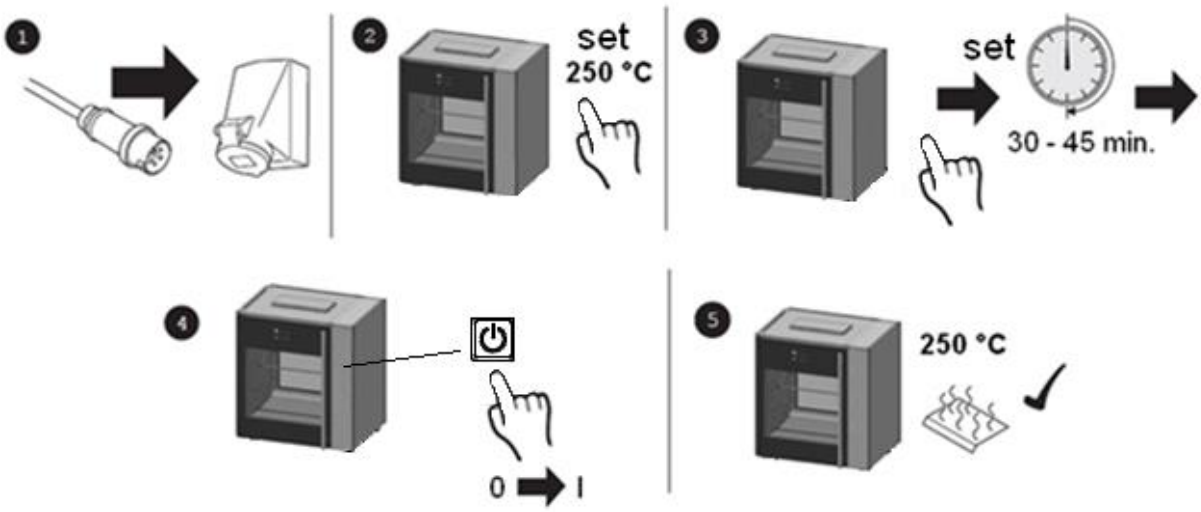

4. OPERATION AND USE

4.1 Control Panel

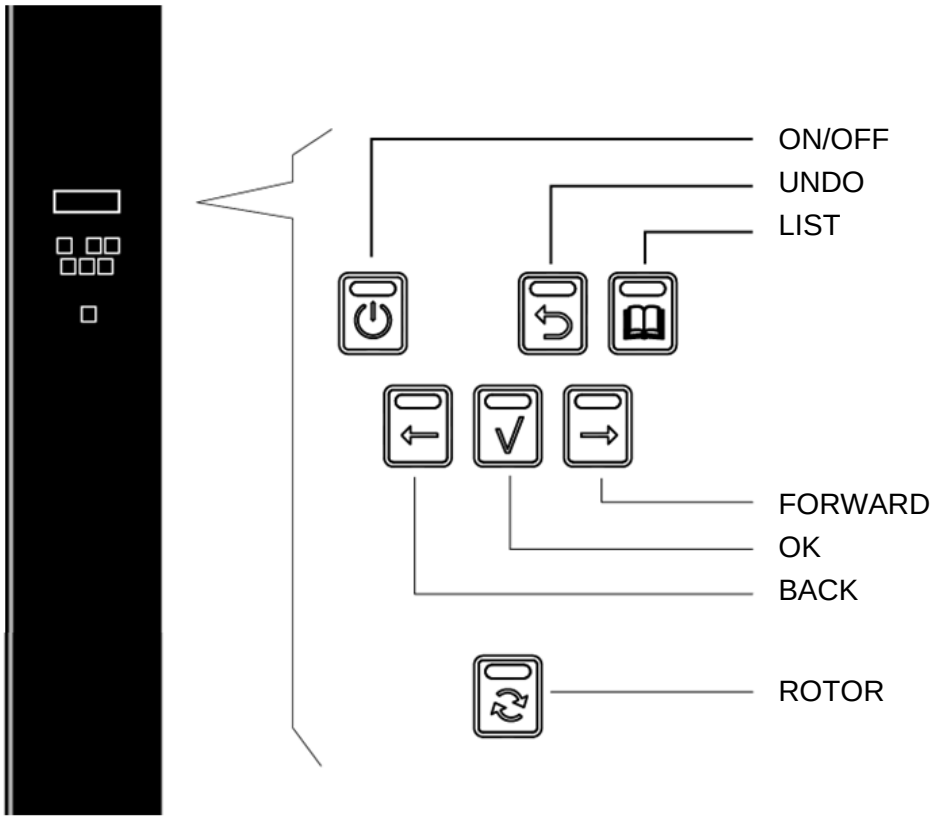

Functions of the controls

Button	Function
ON / OFF	Switching the unit on / off
UNDO	Go back to previous menu
LIST	Recipe / Programming modus
FORWARD	One step ahead in setting
ROTOR	Switching the rotor ON
OK	Acknowledge a function or change
BACK	One step back in setting

4.2 Switching-on the unit

4.3 Loading the unit

First select a program (see section 5).

When the door is open press the rotor button to activate the rotor. This allow easy loading or unloading the products.

Whilst loading the unit, make sure that the rotor gets evenly loaded, so that the mass of the products is evenly spread over de rotor, causing an equal balance. Do not allow empty meat forks, meat baskets and chicken racks etc. in the grilling process.

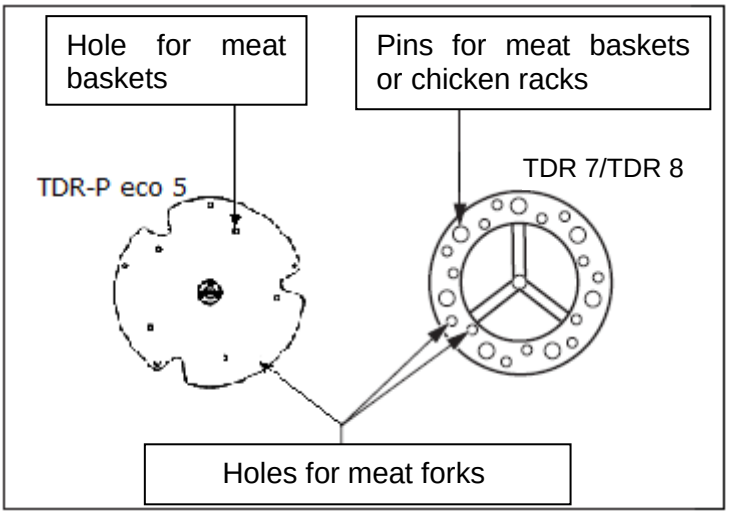

4.3.1 Loading the rotisserie using meat forks

The unit will be equipped with a set of meat forks.

Whole uncut chickens should always be grilled using the meat forks. This way their natural fat will baste each other, giving a perfectly slender cooking result.
Refer to the You-Tube movie: “Fri-Jado instruction for binding and loading chicken”.

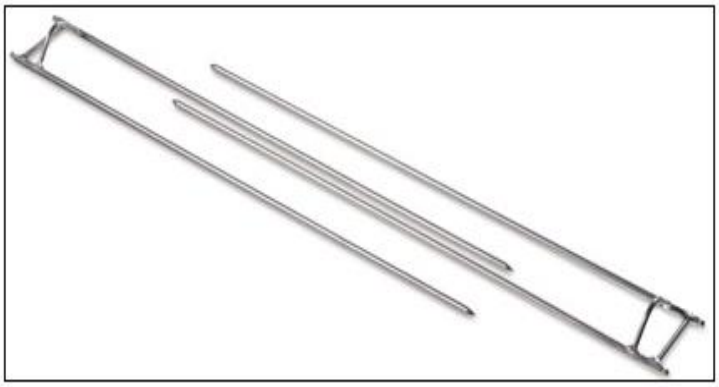

For preparing chicken or any other poultry, you can work as follows:

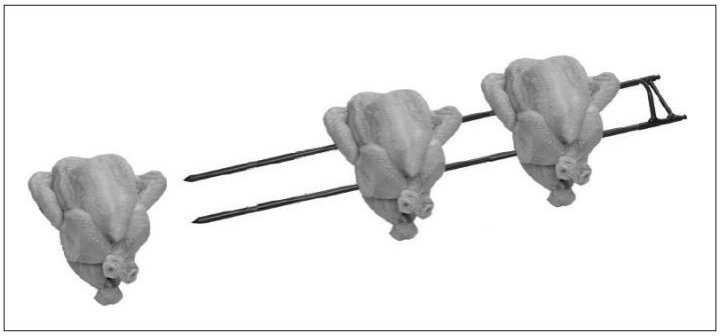

1. Insert one point of the meat fork through the chest at the position of the wings. Insert the other point through the drum sticks. Don't forget to include the wings.
2. Leave some space between the products, for an even exposure and browning.
3. Put the meat forks onto the rotor disks in such a way that during grilling the chicken breasts face the operator.
4. Put the points of the meat forks through the appropriate holes in the rotor disks.

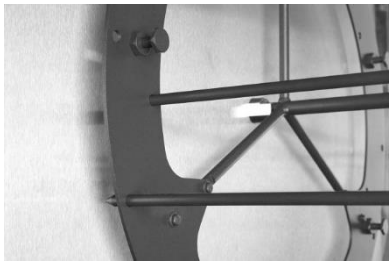
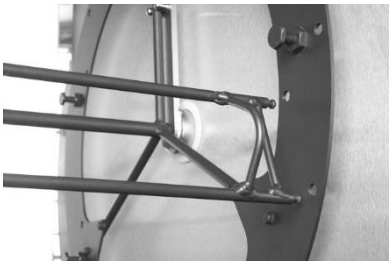

5. The other end of the meat forks must be put through the corresponding holes in the opposite rotor disk.
6. To insert the remaining meat forks in the unit, act as follows:
   - Switch-on the unit using the on/off button'.
   - With the door opened, use the rotor button to move the rotor to easily insert the next meat fork. Keep the rotor button pressed until the rotor reaches the desired position. To load the next meat fork, press the rotor button to rotate the rotor to the next loading position.
   - Repeat these steps, until all products are loaded.

4.3.2 Loading the rotisserie using V-shape spits (accessory)

If you are using V-shape spits act as follows:

- Place the skewer into the small outside hole on the rotor end plate on your left (as you face the oven). The back of the V-shape spit should be pointing towards you.

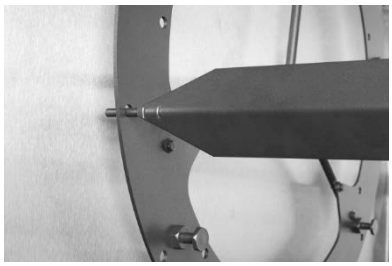

- Fit the other end on the spit into the small corresponding holes on the rotor end plate on your right (as you face the oven).
- Make sure the spit is level. If spit is not level make sure you are using the correct holes on the rotor end plates.

4.3.3 Loading the rotisserie using meat baskets (accessory)

If you are using meat baskets, act as follows:

- With the TDR 5 you must stick the ends of the meat baskets through the appropriate holes of the rotor disks.
- With the TDR 7 and TDR 8 you must attach the meat baskets to the appropriate pins.

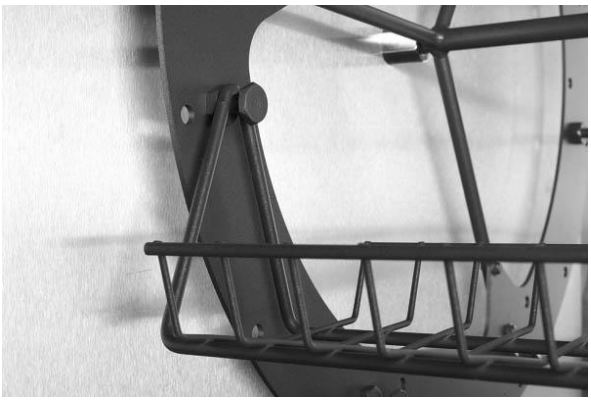

(type for TDR-8 is shown)

- Whilst loading the unit with meat baskets, you must see to it, that the rotor gets evenly loaded, so that the mass of the products is evenly spread over de rotor, causing an equal balance.
- Also see to it that no meat parts are sticking out of the baskets.

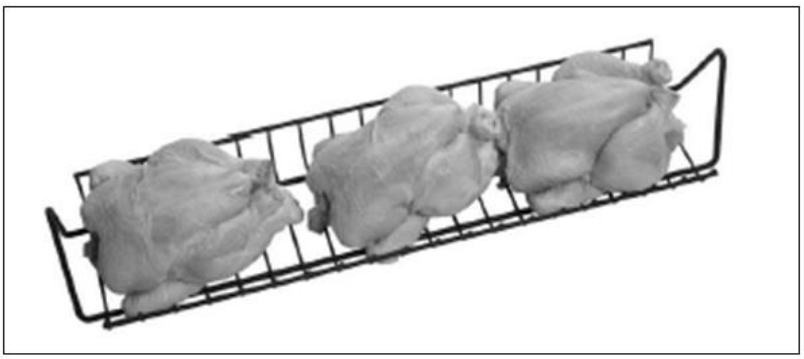

(type for TDR 7 / TDR 8 is shown)

4.3.4 Loading the rotisserie using two different accessories.

WARNING
After loading the rotor, at least make ONE full rotation, and check whether the rotor can spin without obstructions.

If you want to load the unit using two different accessories at the same time, always fill the rotor with ONE accessory fewer than the maximum allowed quantity. See to it that accessories of the same type are placed consecutively.

Example
For both TDR 5 and TDR 5 + 5: 1 meat fork + 2 meat baskets consecutively.

4.4 Grilling time

Grilling time depends on a number of factors:

- The ambient temperature and draft in the direct vicinity of the unit.
- Grilling temperature.
- The initial product temperature.
- The sort of meat (fat or lean) and with or without additives.
- The mass and shape of the product.
- The total amount of meat to be grilled in one grilling cycle.
- The end result.

4.5 Taking out the products

WARNING
After the grilling, the interior of the unit and the glass panes are very hot. Always use oven gloves when taking out the meat forks or other accessories.

4.5.1 Taking out the meat forks

When taking out the meat forks, it is best to act as follows:

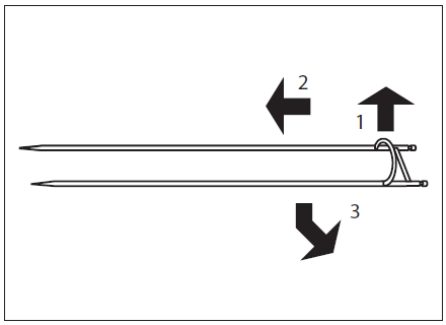

1. Hold the meat fork firmly.
2. Slightly lift the end with the grips and shift the meat fork into the direction of its points.
   This releases the meat fork.
3. Take the meat fork at its other end and take it out of the unit.
4. Remove the products from the meat fork.

Refer to the You-Tube movie: “Fri-Jado instruction for unloading chicken from a rotisserie”.

4.5.2 Taking out the V-shape spit (accessory)

For taking out the V-shape spit you can use the same principle as described in section 4.5.1.

4.5.3 Taking out the meat basket (accessory).

When taking out the meat basket from the TDR it is best to act as follows:

1. Slightly lift both ends of the meat basket.
2. Move the basket towards either the left or right hand side of the unit. This action unlocks one end of the basket.
3. Move the unlocked end towards you and take out the basket from the unit.

Depending on the number of prepared products you may have to empty the baskets before they can be removed.

4.6 Emptying grease drawer

WARNING

Check the grease drawer after each cooking process and empty already when about half full to avoid overflowing. Push the grease drawer completely into the unit after placing it back to prevent damage to the window.

WARNING

Grease will be hot immediately after cooking. Allow grease to cool or use extreme caution and wear insulated gloves or safety mitts.

Drain valve open. (Handle horizontally)

Drain valve closed. (Handle vertically)

1. Open the door and slide the grease drawer out about 130 mm (5 inch).
2. Provide a suitably large bucket or vessel under drain valve and open valve handle.
3. Close drain valve when empty.
4. Push the grease drawer completely into the oven after placing it back to prevent damage to the window.
5. Close the door.

4.7 Switching-off the unit

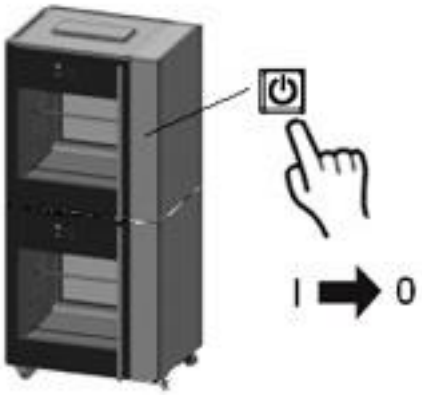

5. OPERATION

Buttons are lit when functional.

5.1 Operation of the rotisserie

1. Press Start.

2. Display shows Fri-Jado logo.

3. Display shows software version.

```
Interface P Eco
TDR
Version   x.x.x
```

4. Display shows latest cooking program.

```
Drumstick
   5  6  7  8  9
```

5. Use the arrow buttons for program selection.

6. Display shows selected program.

```
Chicken
  98  99  1  2  3
```

7. Confirm the selected program.

8. A reminder to empty the fat tray appears.

```
Did you empty
The fat tray?
```

Refer to section 5.2 for pre-heat options.

LOAD
or START

9. After loading, close the door.
Note: press OK or open the door to stop the sound signal.

Note: Screen 8 and 9 alternate each 5 seconds.

10. When loading: press the rotor button to turn the rotor.

11. Press OK to confirm.

180°C 0:59

12. Display show programmed temperature and time (hour : min).

13. (Optional) Press OK button for the actual temperature and time (shows about 2 seconds).

1 Chicken
230°CP123 0:60

14. During the last minute the time blinks.

1 Chicken
230°CP123 0:55

15. Display show the remaining time, the interval is 5 seconds.

UNLOAD

16. Open the door.

Measure Core Temp.

17. A reminder to measure the core temperature appears.

Note: Screen 17 and 18 alternate every 5 seconds.

2 Chicken
:00 Add time?

18. (Optional, visible for 5 min.) request for additional time (minutes) after opening the door.

Note: Add time is only available when activated in the service menu.

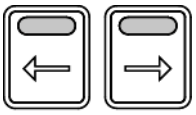

19. (Optional) press right arrow for one minute increase, press left arrow for one minute decrease.
When activated program continues at step 13.

20. Program ready, open door.

21. Press the rotor button to rotate the rotor.

22. Close the door (if required clean the unit).

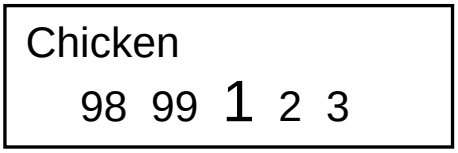

23. Display shows the last operated program.

5.2 Operation options

5.2.1 Pre-heat function

Only when selected in the Manager Menu.

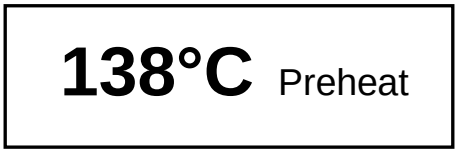

1. Display shows the actual pre-heat temperature.

2. Pre-heat ready
(unit returns a sound signal).
Note: press OK or open the door to stop the signal.

Display shows the next step of the program.

5.2.2 Continues pre-heat function

Only when selected in the Manager Menu.

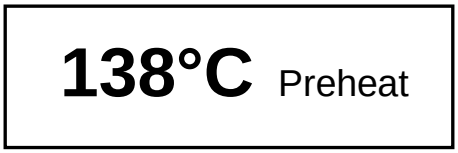

1. Display shows the actual pre-heat temperature.

2. Pre-heat ready
(unit returns a sound signal).
Note: press OK or open the door to stop the signal.

Start Program?
YES NO

Press the OK to start the program.
Display shows the next step of the program.

Select NO and press the OK to continue with pre-heating.

5.2.3 To end a running program.

1. Press and hold ON/OFF for 3 seconds.

Stop?
NO YES

2. Make a choice with the arrow buttons.

Note: Select NO to abort ending the program.

3. Confirm the selection.
(Within 5 seconds).

Chicken
98 99 1 2 3

4. Display shows the last operated program.

5.2.4 Check the actual temperature

1 Chicken
230°C P123 0:05

1. For example: Check the current temperature in
program 1 Chicken, step 1.

2. Press the OK button.

1 Chicken
220°C P123 0:05

3. The display shows during 3 seconds the actual temperature.

5.2.5 Check the remaining time in a program

```
1 Chicken
230°C  P123      0:05
```

1. Use the arrow buttons to show the remaining time pro step.

```
1 Chicken
230°C  P123     0:01
```

2. Time left at step 1 (first digit blinks).

```
1 Chicken
230°C  P123     0:05
```

3. Time left at step 2 (second digit blinks).

5.2.6 Show all actual program information

```
1 Chicken
180°C  P123      0:20
```

1. Display shows actual program. (step one is active).

2. Press List button.

```
180°C 0:20
```

3. Display shows the programmed temperature and time.

4. Press List button again for additional information.

P	180		0:07	3	230	0:05	0:05
1	180	0:20	0:20	H	085	0:10	0:10
2	210	0:10	0:10	C	+ 00:00:00		

5. Display shows the programmed steps and remaining times in one overview.
   (Step – temperature – program time – actual time)

   P: Preheat
   1-3: Program step
   H: Holding
   C: Cook correction

6. Press the OK button to update the screen
(automatically refreshed every 15 seconds).

7. Press List button to go back.

```
1  Chicken
180°C  P123      0:20
```

8. Display returns to the original operating display.

5.2.7 Eco function

```
1  Chicken      eco
180°C  P123      0:20
```

Optional: only available when activated in the manager and service menu.

In the ECO mode the accumulated heat in the cavity will be used to cook the product. Depending on the settings, the product and program an energy saving of 5% can be achieved.

5.2.8 Cook correction

```
180°C 0:20
```

Optional: only available when activated in the manager and service menu.

Cook correction: Depending on the load of products the cooking time will be automatically adjusted.

The first cook is the reference cook and will be used to fix the correct parameters.

The activation of the cook correction is NOT visible in this display.

5.2.9 Display information

180°C 0:20

1. Display shows the programmed temperature and time.

2. Press the list button.

1 Chicken
180°CP123 0:20

3. Display shows after 3 seconds cooking step + temperature + time.

   Note: the current cooking step is underlined.

4. Use arrow button for next screen.

1 Chicken
210°C P123 0:20

5. Cooking step 1 is finished, sound signal is returned.
   Display shows next cooking step + temperature + time.

1 Chicken
230°C P123 0:20

6. Cooking step 2 is finished, sound signal is returned.
   Display shows next cooking step + temperature + time.

1 Chicken
220°C P123 0:20

7. Display shows the actual temperature

   Note: the actual temperature blinks.

1 Chicken
220°C P123 0:15

8. Display shows the remaining time.

   Note: the remaining time blinks, after 5 seconds the original display is shown again.

6. MANAGER MENU

6.1 Manager menu items

Programming New Edit Delete Copy	Parameters Pre-Heat Preheat temperature Holding Holding temperature Cook correction* Eco function* Language Big digits Sound preheat Sound step Sound done	Change pin Clock Transfer Version USB Reading recipes Store recipes

* Only visible when selected in the service menu.

6.2 Programming the rotisserie

Possible programming steps:

- Preheat
- Step 1
- Step 2
- Step 3
- Holding

1. Start the unit.

2. Logo appears.

Interface P Eco
TDR
Version x.x.x

3. Unit information appears.

Drumstick
5 6 7 8 9

4. Last used program appears.

5. Press the list button.

```
Pin  0 - - -
Give User PIN code
```

6. Enter the User PIN code.

   Note: the original PIN code is 1111.
   The operator can change the User PIN code.

7. Use the arrow button to enter the PIN code.

```
Pin  1 - - -
Give User PIN code
```

8. Press the arrow right button to change the first digit.

9. Press the OK button to confirm.

```
Pin  * 0  - -
Give User PIN code
```

10. The next digit is activated.
    Change as required using the arrow button.
    Confirm with the OK button.
    Repeat for the other digits.

```
   MANAGER MENU
…  Programming    ...
```

11. Manager menu is activated.
    Use the arrow buttons to toggle between the sub menu's.

12. Select "Programming" and Press the OK button to confirm.

```
RECIPES
        NEW        …
```

13. Use the arrow buttons to select a new or existing recipe.

14. Press the OK button to confirm.

```
10
Choose new number
```

15. The first available number is shown.

    Note: use the arrow right button to select the next available number.

16. Press the OK button to confirm.

```
10 A--------------
ABC          for others
```

17. Enter the recipe name.

    Use the arrow button to change the character.

    Note: ABC can be changed with the use of the list button into lower / higher case or special characters.

18. Press the OK button to confirm.

```
10 TEST
```

19. The new recipe name is shown

    Note: To change the name of the recipe use the back arrow button and press the OK button.

20. Press the OK button to confirm.

```
10 TEST
Preheat Y    Temp 210°C
```

21. Set the preheat function and temperature (default set on 210 °C / 410°F). Press the left arrow button and the OK button to change the pre-heat setting.

    Note: Pre-heat is only available when activated in the parameter list.

    Preheat functions:
    Y: Yes
    N: No
    C: Continuously

22. Press the OK button to confirm.

```
10  Step 1
Temp 1 - - °C
```

23. Set the “step 1” temperature.
Starting with the first digit.

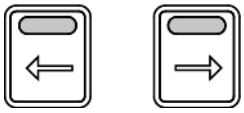

24. Use the arrow buttons to increase/decrease the value of the selected digit.

25. Press the OK button to confirm.

```
10  Step 1
Temp 21 - °C
```

26. Set the second digit.

27. Press the OK button to confirm.

```
10  Step 1
Temp 215 °C
```

28. Set the third digit.

29. Press the OK button to confirm.

```
10  Step 1
Temp 215 °C  Time  1 - -
```

30. Set the “step 1” time.
Starting with the first digit.

Note: Enter the time in minutes.

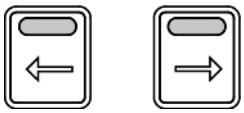

31. Use the arrow buttons to increase/decrease the value of the selected digit.

32. Press the OK button to confirm.

```
10  Step 1
Temp 215 °C  Time  21 -
```

33. Set the second digit.

34. Press the OK button to confirm.

```
10  Step 1
Temp 215 °C  Time  210
```

35. Set the last digit.

36. Press the OK button to confirm.

```
10  Step 1
Temp 215 °C  Time  210
```

37. The Step is now completed.

    Select the right arrow and press the OK button to go to the next step.
    Select the left arrow button and press the OK button to go back to the last setting.
    Select the √ and press the OK button to finish programming.

```
10  Step 2
Temp 1 - - °C
```

38. Program the next step (when required). See step 1 for the procedure.

```
10  Holding
Temp 85 °C  Time  999
```

39. After step 3 or when entering no time at step 2 (or 3) the holding step will appear. Set the temperature and time as required.

    Note: Set the time to 999 for continuous operating.
    Only available when activated (refer to section 6.3).

40. When ready programming press the OK button to confirm.

```
10  TEST
        [Save]        …
```

41. Save the finished programs.

    Note: if the program is not saved all changes are lost!

42. Press the OK button to confirm.

```
RECIPES
        [NEW]         …
```

43. The screen returns to the RECIPES menu.

44. Press back to enter the manager menu.

```
   MANAGER MENU
…  [Programming]   …
```

45. Manager menu appears.

46. Press back to enter the user menu.

```
Drumstick
    5  6  7  8  9
```

47. The last program used is shown.

6.3 Programming parameters

1. Press the list button.

```
Pin  * * * *
Give User PIN code
```

2. Enter your user PIN code.

3. Press the OK button to confirm.

```
MANAGER MENU
...   Parameters   ...
```

4. Press the arrow buttons to select Parameters.

5. Press the OK button to confirm.

```
Language:  Dutch
...   NEXT PAR.   ...
```

6. Press the arrow buttons to select Change or Previous.

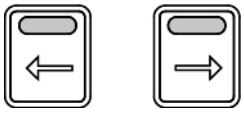

Press the OK button to select the next parameter.

```
Language:  Dutch
   Change   …
```

7. To change the language, select Change.

8. Press the OK button to change.

```
Language:  English
…          Next        …
```

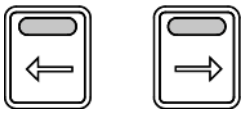

9. Use the arrow buttons to select Change, Next or Previous.

   Press back to enter the manager menu.

```
Save parameters?
        Save        ...
```

10. Press the OK button to confirm or select Discard to cancel.

11. Use the arrow buttons to select the other settings:

Big Digits	YES/NO:	Default set at YES
Sound preheat	Sound T1-T3 Volume 1-4	Default set at T1 Default set at 2
Sound Step	Sound T1-T3 Volume 1-4	Default set at T2 Default set at 1
Sound Done	Sound T1-T3 Volume 1-4	Default set at T3 Default set at 3
Preheat	YES/NO:	Default set at NO
Preheat Temperature	50-250 °C (122-482 °F)	Default set at 210°C (410°F)
Holding	YES/NO:	Default set at YES
Holding Temperature	50-250 °C (122-482 °F)	Default set at 85°C (185°F)
Cook correction	YES/NO:	Default set at YES
Eco function	YES/NO:	Default set at YES

Press back to enter the manager menu.

Press (again) back to enter the user menu.

6.4 Change pin code

```
MANAGER MENU
…   Change Pin   …
```

1. Manager menu.
2. Select Change Pin.
3. Press the OK button.

```
Pin 0 0 0 0
Enter new code
```

4. Enter the new pin code.
5. Press the OK button.

6.5 Clock

```
MANAGER MENU
…   Clock   …
```

1. Manager menu.
2. Select Clock.
3. Press the OK button.

```
2012 / 10 / 1 8:01 AM
SET TIME   ...
```

4. Set the correct date and time.
5. Press the OK button.

6.6 Transfer

```
MANAGER MENU
…   Transfer   ...
```

1. Manager menu.
2. Select Transfer.
3. Press the OK button.

```
Insert stick and press
enter
```

4. Insert stick and press OK.

6.7 Version

```
Interface P Eco
TDR
Version   x.x.x
```

1. Display shows software version.

6.8 USB

```
MANAGER MENU
…  Programming  ...
```

1. Manager menu.

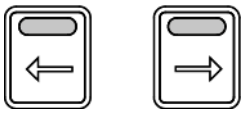

2. Use the arrow buttons to select the USB function.

```
MANAGER MENU
      USB        …
```

3. Screen shows the USB function. Place the USB stick into the USB-slot.

4. Press the OK button to confirm.

```
USB
      Read       ...
```

5. Use the arrow buttons to select Read to exchange an existing program or STORE to save a program.

Option STORE:

```
A_ _ _ _ _ _ _ _
…   File Name
```

6. Enter the file name by using the arrow buttons and OK button.

```
A
      Save File  …
```

7. Select Save.

8. Press the OK button to confirm.

7. CLEANING AND MAINTENANCE

WARNING

Appliance must be disconnected from the power supply during cleaning or maintenance and when replacing parts.

Do not use aggressive or abrasive materials. These will damage the surface which will make it more difficult to remove dirt.

Clean the inside, the removable parts and the accessories thoroughly with cleanser and water before putting the unit into use. Follow the cleaning instructions as described in this chapter.

Treat the outer surface of the interior window with a soft cleaning agent to protect the reflection layer.

Do not touch the halogen lamps with bare hands. Protect hot lamps from cold water.

WARNING

Never use a water hose for cleaning. Water can seep into the unit through the ventilation holes of the unit.

7.1 Maintenance schedule

Item	Action	Frequency
Interior	• Clean, see section 7.2.	Daily
Fat collection drawer	• Empty, see section 7.2.	Daily
Rotor and bottom plates	• Clean, see section 7.2.	Daily
Glass panes	• Clean, see section 7.2.	Daily
Exterior	• Clean, see section 7.3. • Use Stainless Steel cleaning spray to remove stains, and restoring the gloss.	Weekly
Fan blade	• Clean, see section 7.4.	Monthly

For hygiene matters and optimum state of your unit, it is advised to maintain a fixed daily cleaning schedule.

7.2 Daily Cleaning

The unit can be cleaned best shortly after use, when it is still lukewarm. Grilling residue and fat can be removed easily in this state.

The best cleaning can be achieved by using special oven- or grill cleaner.

The door has a magnetic lock. Regularly check the surfaces between the door and grill, and clean if necessary, to avoid air leaks.

Rotor and bottom plates

- Remove the rotor and bottom plates from the unit (no tools required).
- Place the detachable parts in a wide rinsing container filled with hot water and an appropriate cleaning agent.
- Soak these parts for one night and clean them the next day.

Fat collecting drawer

- Carefully take out the fat collection drawer partly.
- Open the tap until the drawer is empty.
- Clean the drawer with cleaning agent or hot water combined with an appropriate cleaning agent.

The interior

- Clean the interior with cleaning agent or hot water combined with an appropriate cleaning agent.
- Dry the interior thoroughly by using a dry cloth. Make sure no water or detergent stays behind in the unit.

Glass doors:

- Open the outer glass doors
- Unlock the inner glass doors (they are magnetically locked to the outer doors).
- Clean the panes with cleaning agent or hot water combined with an appropriate cleaning agent.
- Dry the doors thoroughly by using a dry cloth.
- If possible, leave the glass doors open at night.

7.3 Weekly Cleaning

WARNING
The control panel may only be cleaned using a damp cloth.

The exterior:

- Clean the exterior with cleaning agent or hot water combined with an appropriate cleaning agent.
- Dry the exterior thoroughly by using a dry cloth.

7.4 Monthly Cleaning

WARNING
Remove the power plug from the wall socket.

Clean the fan plate and the fan blade thoroughly as described below.

Fan plate:

- Remove the fan plate by loosening two winged nuts. This plate hinges at two points at the sides. After pivoting, the plate can be removed from the unit.

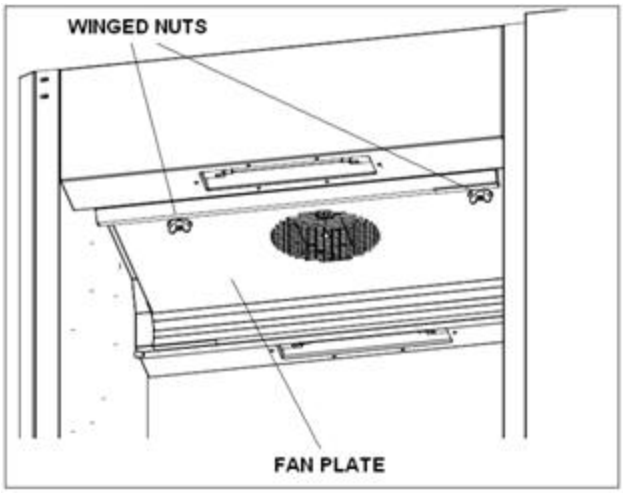

- Clean the fan plate with cleaning agent or hot water combined with an appropriate cleaning agent.
- Dry the fan plate thoroughly by using a dry cloth.

Fan blade:

- Clean the fan blade with a cloth and grill cleaning agent.

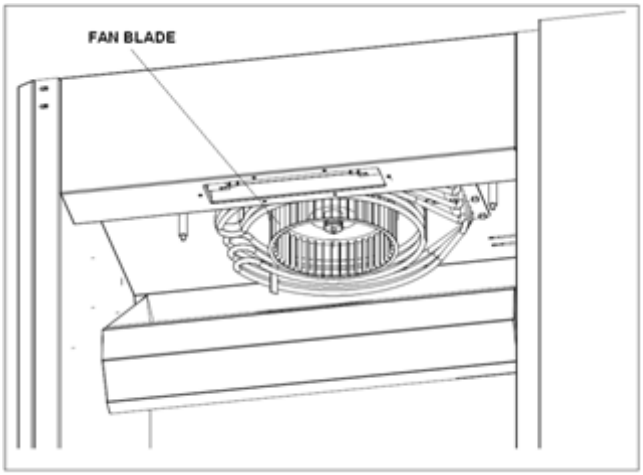

- Dry the fan blade thoroughly by using a dry cloth.

7.5 Cleaning guidelines for non-stick coated surfaces

Several parts of your rotisserie may have a non-stick coating surface. Abrasion and caustic chemicals reduce the life of the coating. With proper care, the non-stick coating surface should provide a long life of easy-to-clean service.

DO NOT do the following:
Do not use scouring pads, steel wool, Scotch-Brite pads, plastic wash pads, or other abrasive cleaning aids (abrasive pads remove the coating over time significantly reducing the life of the coating).
Do not use sharp instruments such as knives, forks, scrapers, or metal objects of any kind.
Do not use oven cleaners.

CAUTION: The chemicals components of some sanitizers can attack the non-stick surface if the sanitizer is not diluted to its recommended strength causing the coating to peel.
Do not attempt to burn-off or bake-off surface contamination.
Do not operate more than eight hours without cleaning.

Cleaning of Non-stick Coated Surfaces (Routine Cleaning):

1. Clean at the end of each cook cycle.
2. Allow surfaces to cool before cleaning.
3. Mix a mild dish washing soap in warm water and use a soft cloth or sponge to remove grease and food residue immediately after the coated component has cooled.
4. Rinse with clean water and let dry.
5. Wipe a light vegetable oil into the surface to condition the surface. Do not use vegetable oil cooking spray.

How to Clean Severe Build-up on Non-stick Coated Surfaces:
Do not use this procedure for routine cleaning.
After successive cook cycles without cleaning, some food residues may become more difficult to remove.
If severe build-up is a regular problem, cleaning schedules should be re-evaluated.

1. Mix the following solution:

3 tablespoons of bleach 1 tablespoon liquid dish washing detergent 1 cup of water

2. Use a sponge or a cloth to apply solution to affected areas. “Plastic” wash pads designed for use on non-stick cookware may be necessary for severe build-up, but never use steel pads.
3. Thoroughly rinse with clean water and let dry.
4. Condition with vegetable oil.

8. MALFUNCTIONS AND SERVICE

Before you contact your supplier/dealer in case of a malfunction, there are some items you can check yourself:

- Is the power supply working properly? Check fuses and differential switch.
- Has the timer clock been properly set?

Item	Malfunction	Possible action
Control	Program do not start	• Check if both doors are closed correctly.
Fan	Fan not spinning	• Remove the plug from the socket. • Open the door. • Remove fan plate (see section 7.4) and check what's blocking the fan blade.
Fan	Noisy fan	• Fan polluted, clean (see section 7.4).
Lamp	Does not light up	• Set OFF in service menu. • Door is open. • Defect, refer to section 8.2.
Oven	Product is not getting done equally	• Try a lower cooking temperature. • Check fuses and/or the differential switch.
Oven	The oven does not heat up	• Open and close door. • Check fuses and/or the differential switch in the electricity board.
Mains cord	Damaged	• Replace, see section 8.1

8.1 Replace the mains cord

WARNING
Hazardous electrical voltage.

If the mains cord is damaged, it must be replaced by the manufacturer, his service agent or a similarly qualified person in order to avoid hazards.

8.2 Replace a lamp

WARNING
Remove the power plug from the wall socket.

WARNING
Do not touch the lamps with bare hands. **Use a clean cloth or paper tissues when replacing the lamp.**
Remove any moisture with alcohol or methyl spirits after the lamp has cooled down.

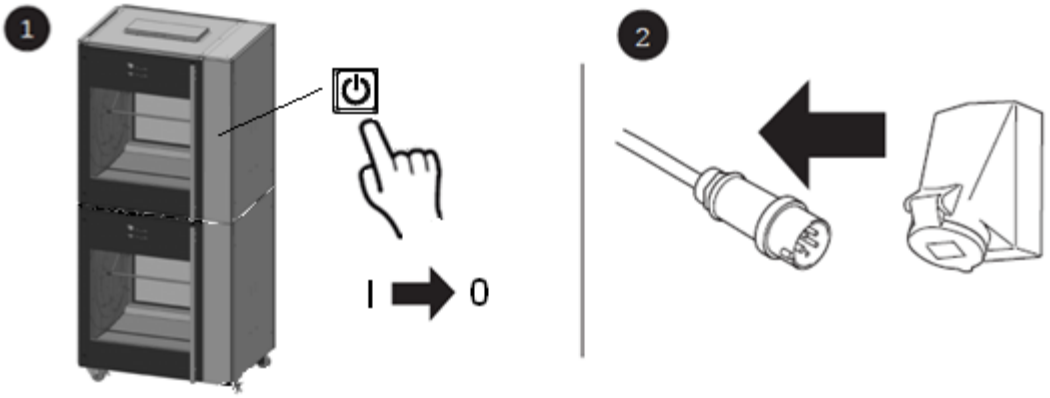

3. Remove the grid

4. Remove the broken lamp by moving it in the length-direction of the lamp holder.

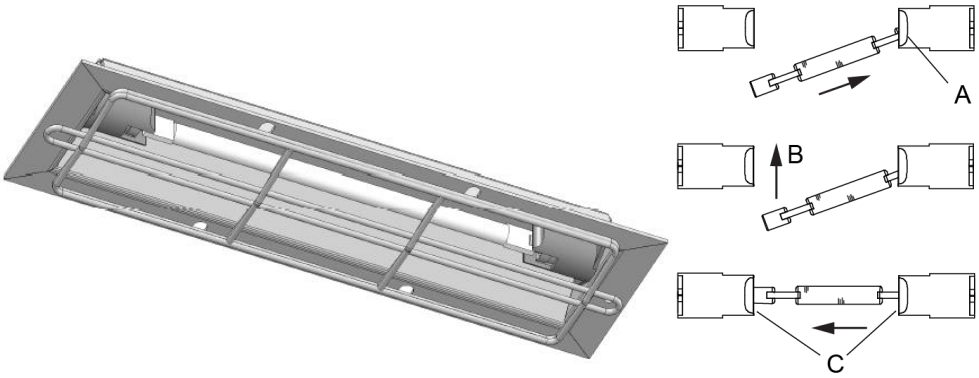

5. Install the new lamp (230 V – 500 W). First press one side of the lamp into the lamp holder (A). Press lamp in its correct position (B) and use its spring pressure to make contact with the other terminal (see figure).
6. Make sure the lamp is correctly clamped between the two terminals (C). If this is not the case, the lamp can move freely along its length-direction, until it is fixed into its terminals.
7. Remount the grid.

9. TECHNICAL SPECIFICATIONS

WARNING
Consult the identification plate to get the proper specifications of the unit. The electrical data may vary from country to country.

The technical specifications of the different models in the TDR-P eco are shown in the next tables.

European Models

Model	TDR 5	TDR 8	TDR 5+5	TDR 8+8
Dimensions				
- Width	835 mm	995 mm	835 mm	995 mm
- Depth	710 mm	830 mm	710 mm	830 mm
- Height	895 mm	1050 mm	1775 mm	2080 mm
Weight				
- Gross	160 kg	210 kg	300 kg	425 kg
- Net	130 kg	185 kg	266 kg	375 kg
Maximum ambient temperature	35 °C	35 °C	35 °C	35 °C
Sound pressure	< 70 dB(A)	< 70 dB(A)	< 70 dB(A)	< 70 dB(A)
Electrical installation				
- Voltage	3N~ 400/230 V	3N~ 400/230 V	3N~ 400/230 V	3N~ 400/230 V
- Frequency	50/60 Hz	50/60 Hz	50/60 Hz	50/60 Hz
- Required power	6.6 kW	10,5 kW	13.2 kW	21 kW
- Max. nom. current	10.0 A	15.5 A	20 A	31 A
Plug1	CEE-form 16 A	CEE-form 16 A	CEE-form 32 A	CEE-form 32 A
Length of power cable approx.	2,20 m	2,20 m	2,20 m	2,20 m

American Models

Model	TDR 5	TDR 7 / TDR 8	TDR 5+5	TDR 7+7 / TDR 8+8
Dimensions				
- Width	33 inch	39 ¼ inch	33 inch	39 ¼ inch
- Depth	28 inch	32 ¾ inch	28 inch	32 ¾ inch
- Height	35 ¼ inch	41 ¼ inch	70 inch	82 inch
Weight				
- Gross	353 lbs	463 lbs	661 lbs	937 lbs
- Net	287 lbs	408 lbs	586 lbs	827 lbs
Maximum ambient temperature	95 °F	95 °F	95 °F	95 °F
Sound pressure	< 70 dB(A)	< 70 dB(A)	< 70 dB(A)	< 70 dB(A)
Electrical installation				
- Voltage	3~ 208 V	3~ 208 V	3~ 208 V	3~ 208 V
- Frequency	50/60 Hz	50/60 Hz	50/60 Hz	50/60 Hz
- Required power	6.6 kW	10.5 kW	2x 6.6 kW	2x 10.5 kW
- Max. nom. current	18.9 A	30.8 A	2x 18.9 A	2x 30.8 A
Plug	NEMA15-30P	NEMA 15-50P	2x NEMA 15-30P	2x NEMA 15-50P
Length of power cable approx.	75 inch	75 inch	75 inch (2x)	75 inch (2x)

1 Depending on Country

Empty page.

Empty page.

Empty page.

Fri-Jado Inc.
1401 Davey Road, Suite 100
Woodridge IL 60517
USA
Tel: +1-630-633-7950

www.frijado.com