USER MANUAL

Deli Multisserie
Bakery Multisserie

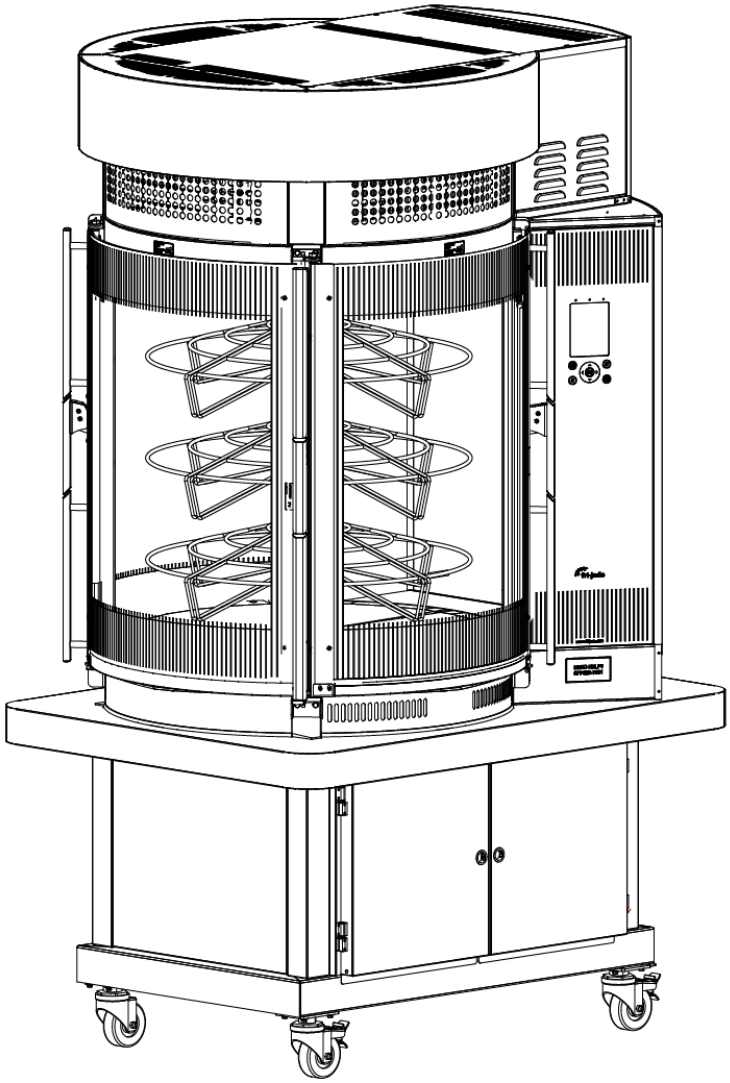

WARNING
Read the instructions before using the machine.

KEEP THIS USER MANUAL FOR FUTURE USE

© 2020 Fri-Jado B.V., Etten-Leur, The Netherlands.

We advise you to contact your supplier for the guarantee period and conditions. Further we refer to our General Terms and Conditions for Sales and Delivery that are available upon request.
The manufacturer does not accept any liability for damage or injury caused by failing to adhere to these regulations or by not observing the usual caution or care in actions, operation, maintenance or repair activities, even if not explicitly described in this manual.
As a result of constant commitment to improvement, it may happen that your unit deviates in detail from what is described in this manual. For this reason, the given instructions are only a guideline for the installation, use, maintenance and repair of the unit referred to in this manual. This manual has been composed with the utmost care. The manufacturer shall, however, not be held responsible for any mistakes in this manual nor for any consequences thereof. The user is allowed to copy this manual for own use. Further all rights are reserved and nothing in this manual may be reproduced and/or made public in any way.

Modifications:
In case of unauthorized modifications in or on the unit, every liability on the part of the manufacturer becomes null and void.

Empty page.

CONTENTS

1. INTRODUCTION 6
1.1 General 6
1.2 Identification of the unit 6
1.3 Pictograms and symbols 6
1.4 Safety instructions 7
1.4.1 General 7
1.4.2 Moving 8
1.5 Hygiene 8
1.6 Service and technical support 8
1.7 Storage 8
1.8 Disposal 8
2. DESCRIPTION OF THE UNIT 9
2.1 Technical description 9
2.2 Intended use 9
2.3 Accessories 10
2.4 Parts 10
2.4.1 Overview of the Deli Multisserie unit with grease collector 10
3. INSTALLATION AND FIRST USE 11
3.1 Unpacking the unit 11
3.2 Installation and positioning 12
3.3 First use 13
4. OPERATION AND USE 14
4.1 Control panel 14
4.2 Switching-on the unit 15
4.3 Loading the unit 15
4.4 Grilling time 17
4.5 Taking out the products 17
4.6 Grease discharge (only Deli Multisserie) 18
4.6.1 Grease collector bag 18
4.6.2 Grease separator 18
4.7 Switching-off the unit 19
4.8 Emergency stop 19
5. OPERATE 20
5.1 Starting a program 20
5.2 Change Grease Bag (only Deli Multisserie) 20
5.3 Pre-heating 21
5.4 While cooking 21
5.5 Adding extra time to the active program 22
5.6 Interrupt a program 22
5.7 Set the timer 23

5.8 Reset alarm signal ... 23
5.9 Power down ... 23
6. SETTINGS ... 24
6.1 General ... 24
6.2 Information ... 24
6.2.1 Access ... 24
6.2.2 Overview ... 24
6.3 Manager ... 25
6.3.1 Access ... 25
6.3.2 Overview parameters ... 25
6.4 Service Menu ... 25
7. PROGRAM ... 26
7.1 General ... 26
7.2 Adding programs ... 26
7.2.1 Enter the program name ... 26
7.2.2 Programming cooking step ... 27
7.2.3 Keeping warm (HOLD) ... 28
7.2.4 Saving the program ... 28
7.3 Edit programs ... 29
7.4 Deleting programs ... 30
7.5 Testing the programs ... 30
7.6 Sorting programs ... 31
7.7 Automatic switch-off ... 31
8. CLEANING AND MAINTENANCE ... 32
8.1 Periodic maintenance ... 32
8.2 Daily Cleaning ... 33
8.2.1 Automatic cleaning cycle ... 33
8.2.2 Installing the spray arm (only for Bakery Multisserie) ... 34
8.2.3 Start the cleaning program ... 34
8.2.4 After cleaning ... 35
8.2.5 Change cleaning agent ... 35
8.2.6 Clean the accessories ... 35
9. MALFUNCTIONS AND SERVICE ... 36
9.1 Replacing the mains cord ... 36
9.2 Replace a lamp ... 37
10. TECHNICAL SPECIFICATIONS ... 38
11. OPTIONS AND ACCESSORIES ... 39

1. INTRODUCTION

1.1 General

This manual is intended for the user of the MTS (Multisserie). The features and controls are being described, along with directions for the safest and most efficient use, in order to guarantee a long life of the unit.

All pictograms, symbols and drawings in this manual apply to all MTS models.

1.2 Identification of the unit

The identification plate can be found on the outside of the machine (underneath the right back door), and contains the following data:

- Name of the supplier or the manufacturer
- Model
- Serial number
- Year of construction
- Voltage
- Frequency
- Power consumption

1.3 Pictograms and symbols

In this manual, the following pictograms and symbols are used:

WARNING
Possible physical injury or serious damage to the unit, if the instructions are not carefully followed.

WARNING
Hazardous electrical voltage.

WARNING
Danger of getting injured by hot surfaces.

Suggestions and recommendations to simplify indicated actions.

Recycling symbol.

Direction of view symbol.

1.4 Safety instructions

WARNING
The outside of the unit can be very hot.

WARNING
See installation instructions for grounding requirements.

WARNING
Always use the brakes on both front wheels:

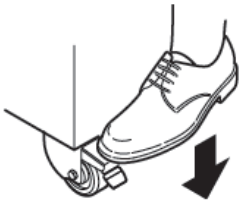

1.4.1 General

The user of the unit will be fully responsible for abiding the locally prevailing safety- rules and regulations.
The unit may be operated by qualified and authorized persons only. Anyone working on or with this unit must be familiar with the contents of this manual and carefully follow all guidelines and instructions. Never change the order of the steps to be performed. The management must instruct the personnel on the basis of this manual and follow all instructions and regulations.

The pictograms, labels, instructions and warning signs attached to the unit, are part of the safety measures. They may never be covered or removed, and have to be clearly visible during the entire lifetime of the unit.
Immediately repair or replace damaged or illegible pictograms, warnings and instructions.

- To avoid short-circuiting, never clean the unit using a water hose. For cleaning instructions, see section 8.
- During the grilling process, the unit can get very hot.
- When the door is opened the rotor stops and the heater is de-energized.
- The unit must be cleaned regularly to ensure proper functioning and prevent fire hazard (over heating). Especially the back of the fan plate.
- This appliance can be used by children aged from 8 years and above and persons with reduced physical, sensory or mental capabilities or lack of experience and knowledge if they have been given supervision or instruction concerning use of the appliance in a safe way and understand the hazards involved.
- Children shall not play with the appliance.
- Cleaning and user maintenance shall not be made by children without supervision.

1.4.2 Moving

When moving the unit:

- Before moving the unit, first switch off the mains voltage by pulling the plug from the wall socket. After that, cool-down the unit for at least ten minutes.
- Disconnect the water supply and drain.
- The unit equipped with wheels is not suited to pass ledges or obstacles higher than 10 mm (3/8 inch).
- When moving the unit, always push at the center of the unit. Never on top. Never at the bottom.
- Make sure that the wheels can move freely, so they never touch the power lead

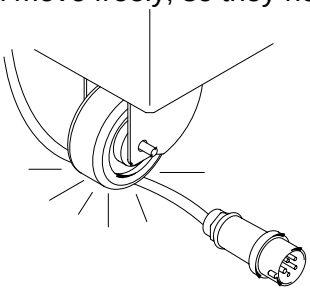

1.5 Hygiene

The quality of a fresh product always depends on hygiene. Especially grilling products. With the risk of salmonella contamination – especially for chicken products – you must make sure that grilled products can never be mixed with uncooked products. Also contact between grilled products and hands or tools that have been in contact with raw chicken meat, must be avoided at all times.
Hands or tools that have been in contact with raw chicken meat, must be cleaned thoroughly.

1.6 Service and technical support

The electrical schematics of your unit is included. In case of malfunctions you can contact your dealer/service agent. Make sure you have the following data available:

- Model.
- Serial number.

This data can be found on the identification plate.

1.7 Storage

If the unit will not be used temporarily, and will be stored, follow these instructions:

- Clean the unit thoroughly.
- Wrap the unit from getting dusty.
- Store the unit in a dry, non-condensing environment.

1.8 Disposal

Dispose of the machine, any components or lubricants removed from it safely in accordance with all local and national safety and environment requirements.

2. Description of the unit

2.1 Technical description

The MTS uses convection heat. The fans provides an equally divided heat. The glass panes are equipped with a heat reflecting layer to keep the heat inside the grill. The unit is equipped with an under frame.

The material of the unit is made of stainless steel. The product contact parts are made of stainless steel AISI 304 (eventual with PTFE coating). The mains cable has a CEE-form plug (European models).

The intelligent control keeps the temperature inside the unit fixed to level set by the operator. During the entire process, the interior of the unit will be illuminated by halogen lamps.
The intelligent control has a capability to store 250 different programs.
Each program can consist of a pre-heat step, with additional (maximum 9) steps, in which the cooking time and temperature can be set.
Communication through USB enables easy read-out, re-work and creating of programs via a PC. For this, special software is available at Fri-Jado.

The unit has an automated cleaning program that cleanses the unit.

Grease collector or grease separator (Deli Multisserie only)
Depending on the model grease and small pieces of product residue will be during the preparation process collected and stored in a grease collector bag or grease separator. Grease and pieces of product residue can this way be removed easily.

2.2 Intended use

The Multisserie has been designed for:

- grilling meat products,
- preparing other kinds of meat and fish,
- baking bread,
- regenerating food and keeping food warm,
- preparing vegetables, and

has a special self-cleaning feature. Any other use will not be regarded as intended use.
The manufacturer accepts no liability whatsoever for loss or injury caused by failing to strictly adhere to the safety guidelines and instructions in this manual or due to carelessness during installation, use, maintenance and repair of the unit referred to in this manual and any of its accessories.

Use the unit in perfect technical condition only.

2.3 Accessories

Your unit contains the following standard accessories:

Deli Multisserie

- 12 chicken racks.
- Grease collector with disposal bags or the grease separator system.
- User manual.

Bakery Multisserie

- Baking rack.
- User manual.

For optional accessories refer to section 11.

2.4 Parts

2.4.1 Overview of the Deli Multisserie unit with grease collector

A. Double glass door
B. Spray arm
C. Condensation collector tray
D. Outlet grid
E. Doors to the technical area
F. Control panel
G. Filters
H. Suspension System for chicken racks, meat baskets or baking trays
I. Emergency stop switch
J. Compressor
K. Grease separator
L. Cleaning agent

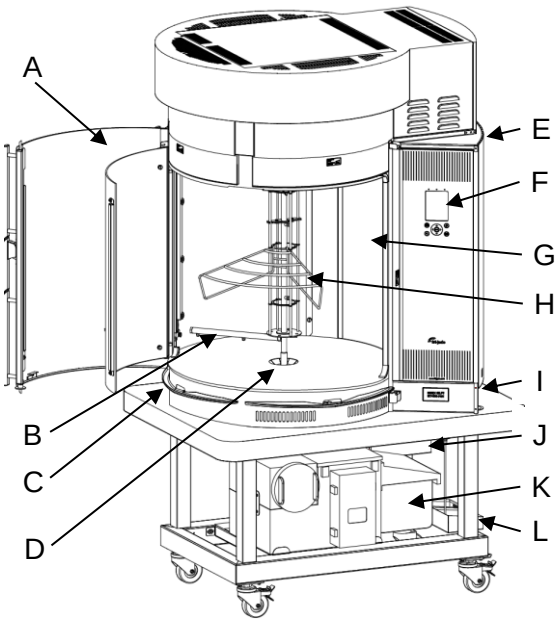

3. INSTALLATION AND FIRST USE

WARNING
Use the hoses supplied with the machine. Never use second-hand hoses!
Refer to the Installation manual.

All packing materials used for this unit are suited for recycling.

After unpacking, check the state of the unit. In case of damage, store the packing material, and contact the transporter within fifteen working days after receiving the goods.

3.1 Unpacking the unit

Your unit is shipped using a wooden crate. All units are placed on a wooden pallet.

❶

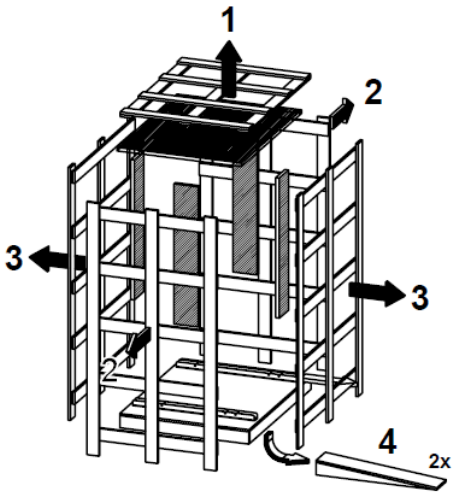

❷

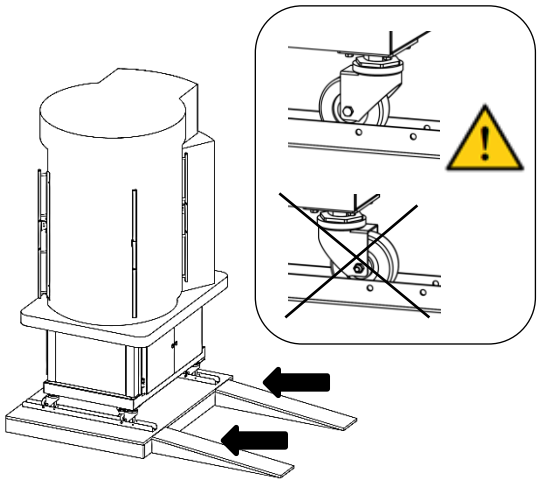

❸

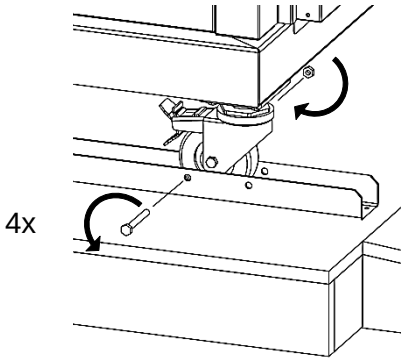

❹

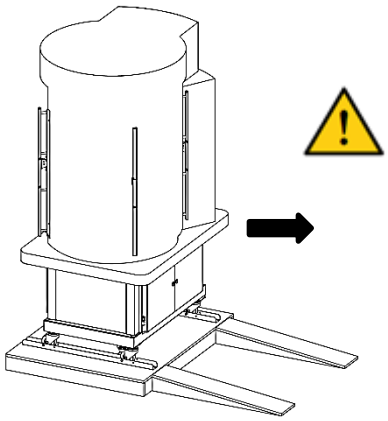

1. Remove the wooden crate and wooden support boards (not shown).
2. Place the ramps at the correct side.
3. Remove the bolts.
4. Guide the heavy unit when moving it of the pallet.
5. Remove all remaining packing materials from the unit.
6. Remove the protective foil from the metal parts.
7. Take off the standard accessories.

3.2 Installation and positioning

WARNING

Position the unit on a flat and horizontal surface. A temporally inclined plane of maximum 5° is allowed.

A minimum wall clearance of 150 mm (6 inch) from any glass and the back panels must be maintained.

WARNING

The unit must be installed by a certified electrician.

Prior installation, test the electrical service to ensure that it agrees with the specifications on the machine data plate located at the right back door.

WARNING

Electric chock hazard. Grounding instructions: only connect the appliance to an alternating current provided by a grounded wall socket, with a mains voltage in accordance with the information indicated on the data plate of the appliance.

It is the consumer's responsibility to make sure the electrical installation conforms with current national and local codes and wiring regulations.

Do not use a multi plug or extension cord. Such can result in fire, electrical shock, or other personal injury.

Failure to follow these instructions can result in death or serious injury.

WARNING

Depending on the executed processes the waste water of a Deli Multisserie contains small quantities of grease. Stick to locally valid regulations regarding the discharge of grease.

Positioning:

Refer to the Installation Manual. Points of interest:

- The user must have sufficient freedom, approx. 750 mm (30 inch), of movement to properly operate and servicing the unit.
- The ambient temperature of the unit must be between 10 and 30 °C (50 and 86 °F).
- Use proper lifting– and transport tools to move the unit.
- Place the unit, using a spirit level, flat on a solid surface. Mind the weight of the unit!
- In case of a wheeled unit, the floor must be flat and leveled.
- The products inside the unit must be clearly visible.
- Bear in mind that the ceiling will be able to withstand the rising steam when the door is opened.
- Keep children away from the operating side of the unit. During the grill process the windows get hot.

Installation:

- Aerated cold water connection (only drinking water quality).
- Optional branching with anti-scale filter for soft water supply.
- An open cleaning water drainage with a diameter of at least 40 mm (1.6 inch).
- Use the hoses supplied with the unit.
- When equipped with casters secure the unit to the building structure using the tether bracket: refer to the installation manual.
- When the unit has fixed wiring it must be connected by a certified electrician.

Fri-Jado recommends the use of an anti-scale filter by a carbonate hardness of 7 °KH or higher. Water with greater carbonate hardness causes lime scale deposits in the pipe system in the unit and can cause the system to get clogged.

3.3 First use

When using the unit for the first time, manually clean the interior thoroughly with soap suds. Run the Install program and heat up the unit as described below. After commissioning discoloration of the cooking/grilling area can occur.

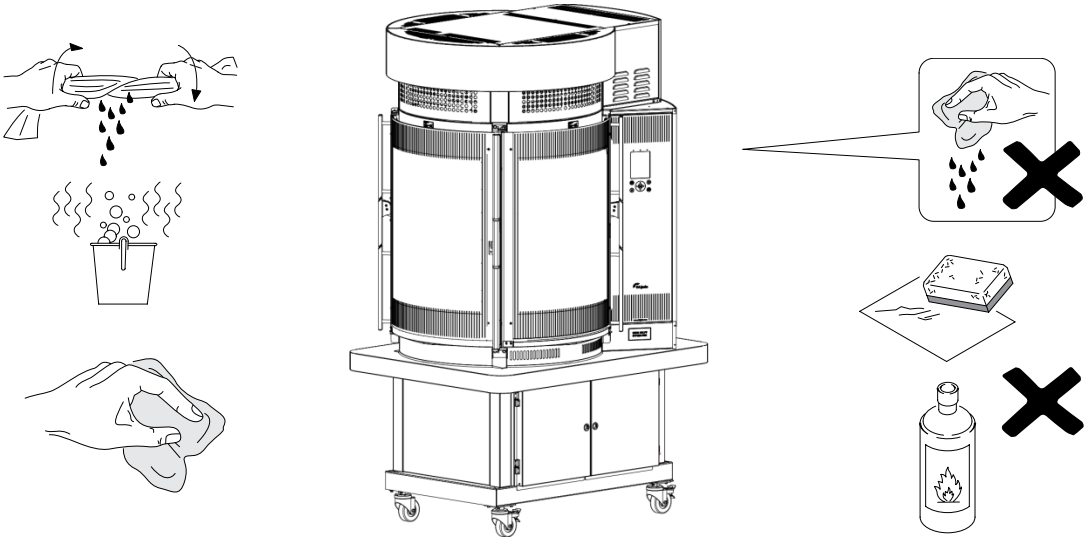

Metal odor

To remove both the oil- and metal odor that will appear at first use, the unit must be heated at the maximum temperature for at least half an hour.

❶

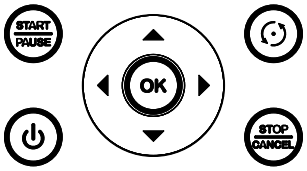

SET 250°C / 482 °F

❷

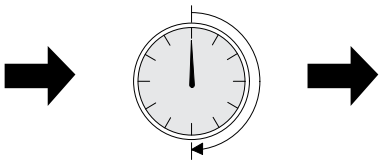

SET 30-45 min.

❸

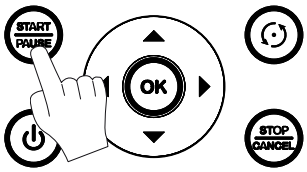

START

❹

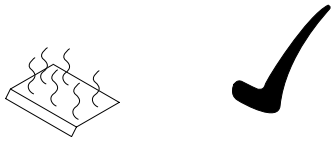

250°C / 482 °F

1. Press “ON/OFF” for 3 seconds on to switch-on the unit.
2. Press OK the display the menu.
3. Create a new program containing ONE step of 250 °C / 482 °F and a duration of at least 30 minutes (See section 7).
4. Select tab “Operate” to return to the operation field.
5. Select the new program and press START/PAUSE to start (See section 4).
6. Allow the unit to fully execute the program.

The unit is now ready for use.

4. OPERATION AND USE

4.1 Control panel

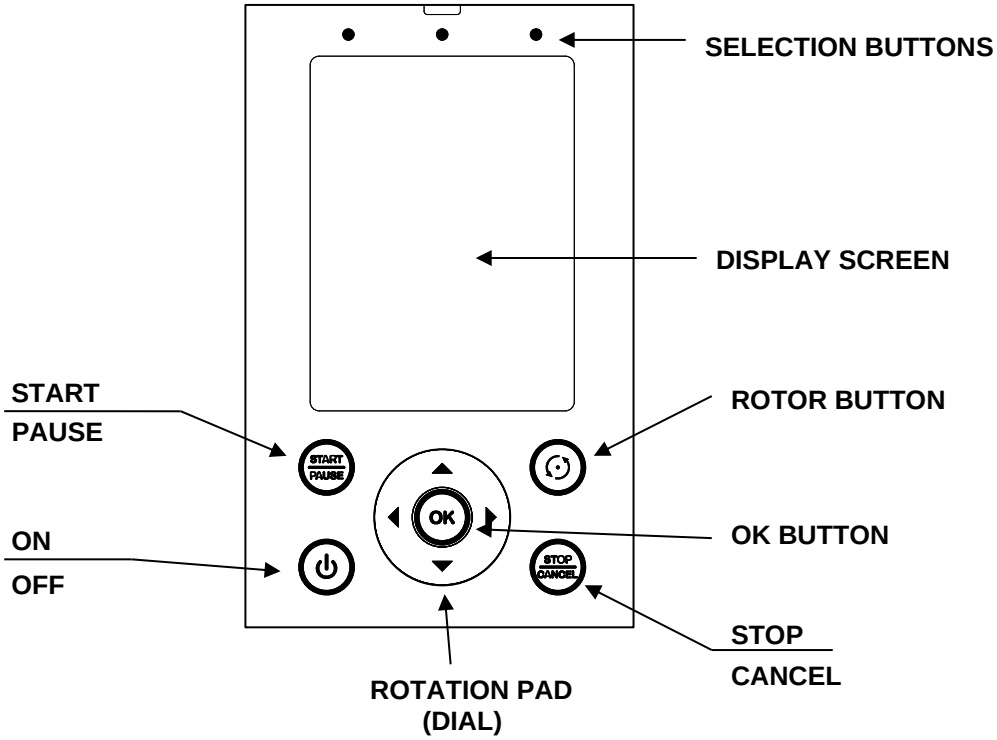

Button	Function
SELECTION BUTTONS	Selecting tabs in display screen.
ON / OFF	Switching the unit on and off.
START / PAUSE	Starting and ending a program.
STOP / CANCEL	Interrupting a program (one step back in the menu)
OK BUTTON	Acknowledge a choice
ROTOR BUTTON	Rotate the rotor
ROTATION PAD	See "Rotation pad"

Rotation pad
This pad is used for:

- Navigating through the menu-items in the screen,
- Changing the settings.

Changing the settings quickly

- Increase value: rub the pad clock-wise with one finger.
- Decrease value: rub the pad counter-clock-wise with one finger.

Screen
The following tabs are present:

- Operate “Choose between programs” (See section 5),
- Program “Creating programs” (See section 7),
- Settings “Change settings of programs” (See section 6).

4.2 Switching-on the unit

❶

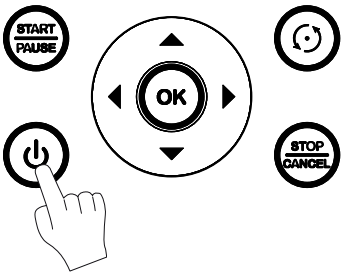

❷

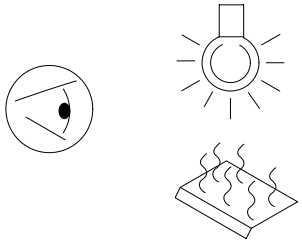

Press ON/OFF button and hold for approx. 2 seconds.

4.3 Loading the unit

WARNING

The Oven is not designed to roast frozen foods. Use only fresh or previously thawed product

When the door is open press the rotor button to activate the rotor. This allows easy loading or unloading the products.

Deli Multisserie

Whilst loading the unit, make sure that the rotor gets evenly loaded, so that the mass of the products is evenly spread over de rotor, causing an equal balance. Do not allow empty meat baskets and chicken racks et cetera in the grilling process.

For preparing chicken or any other poultry, you can work as follows:

- Clean hands, all work areas and tools before and after preparing poultry to avoid cross-contamination.
- Maintain proper sanitation at all times.

To load a chicken or garnish then you must do the following (see figure below):

- Tuck the wings to the back.
- Tie the legs.

Chicken racks (A)

1. Hang the chicken racks in the rotor system.
2. Place the chicken on the racks as indicated.

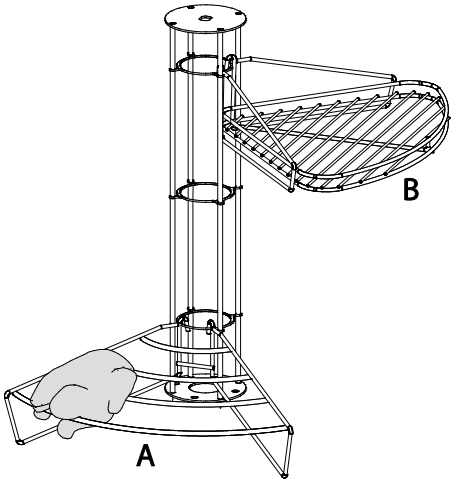

Meat baskets (B) (accessory)

1. Hang the meat baskets in the rotor system.
2. Put the meat in.

Meat baskets 2nd level (accessory)

1. Hang the meat baskets in the rotor system.
2. Place the 2nd level in the meat baskets.
3. Put the meat in.

Insert tray for meat baskets (accessory)

1. Hang the meat baskets in the rotor system.
2. Place the insert tray in the meat baskets.
3. Put the meat in.

WARNING

With meat products, chicken in particular, you have to make sure that the tip of the core temperature sensor is in the meat and not in a hollow space or touching an accessory or bone.

Bakery Multisserie

Using baking trays (accessory)

1. Hook the guiding rails (A) into the square holes in the rack.
2. Enter the baking trays (B), work from the bottom up.
3. Place the next one four positions higher each time.

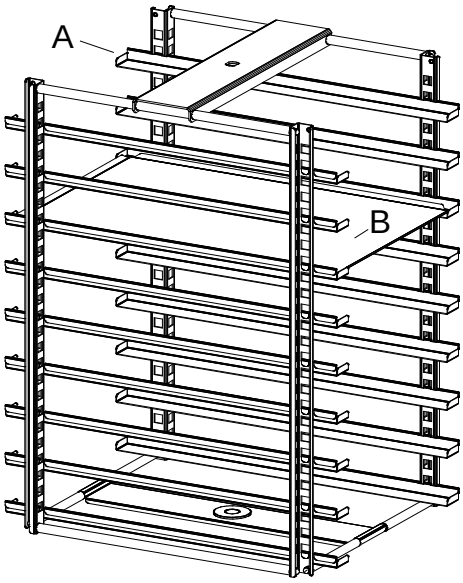

Gourmet pans (accessory)

By applying the rack as in the Bakery Multisserie a maximum of 6 perforated gourmet pans can be placed 1/1 x 50 mm.

1. Start at the third from bottom position.
2. Place the next one four positions higher each time.

4.4 Grilling time

Grilling time depends on a number of factors:

- The ambient temperature and draft in the direct vicinity of the unit.
- Grilling temperature.
- The initial product temperature.
- The sort of meat (fat or lean) and with or without additives.
- The mass and shape of the product.
- The total amount of meat to be grilled in one grilling cycle.
- The end result.

Seasonings
The use of herbs and seasoning adds a specific twist to every meal. Using them right is of great importance for the end result.
Guidelines for seasoning are:

- Preferably use the special chicken and meat seasonings of the supplier of the Fri-Jado Grill. There are special seasoning mixtures for poultry, lamb, pork, large meat, game and fish.
- Season the products to be grilled when dry.
- Season the products 90 minutes before grilling at the most to prevent the spices from abstracting too much fluid from the meat.
- Do not add oil or grease while grilling.
- Season chicken on the inside and on the outside.

4.5 Taking out the products

WARNING
After the grilling, the interior of the unit and the glass panes are very hot.
Always use oven gloves when taking out products or accessories.
Carefully open the door, let possible built up steam escape first.
Measure the core temperature of the products for each batch.

The program goes to standby after having performed the program.
An alarm signal will sound if this has been set. This signal can be stopped by pressing OK.

1. Remove the products from the unit.
2. Replace the grease collector bag in the Deli Multisserie.

4.6 Grease discharge (only Deli Multisserie)

4.6.1 Grease collector bag

WARNING
Replace the grease collector bag before each grilling process.

WARNING
Grease will be hot immediately after cooking. Allow grease to cool or use extreme caution and wear insulated gloves or safety mitts.

REMOVING THE BAG

1. When the grease bag is full, disconnect it from the drain by pressing the lever down.
2. Gently slide the box out of the Multisserie.
3. Screw the blue cap back on the opening.
4. Slide the bag out of the smaller slot towards the round hole. Slide the metal cover off the box and dispose the bag in a suitable waste container by turning over the box.

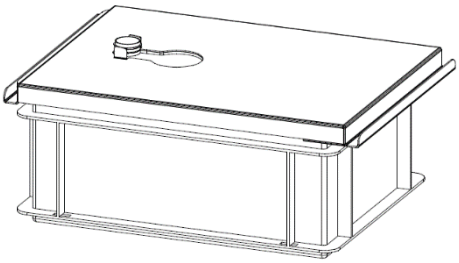

REPLACING THE BAG

1. Before replacing the grease bag, place the nozzle in the opening of the bag. Now firmly press and make sure it clicks twice. Pull the nozzle to confirm it is secured. Remove the blue cap by unscrewing it.
2. Place the bag in the box with the opening facing upwards.
3. Slide the metal cover on the box. Make sure the two lips slide under the upper edge of the plastic box.
4. Feed the plug through the opening in the cover.
5. Take the plug and slide the bag from the round hole into the smaller slot. The bag is now fixed in place between the lowest ring of the plug and the metal cover.
6. Slide the box, opening facing forward between the guides in the stand. Make sure the rear side of the box hits de rear guide.
7. Push the lever upwards and then to the left.
8. Check the connection of the grease drain to the opening in the box. Make sure it is lined up correctly so grease doesn't drip out.

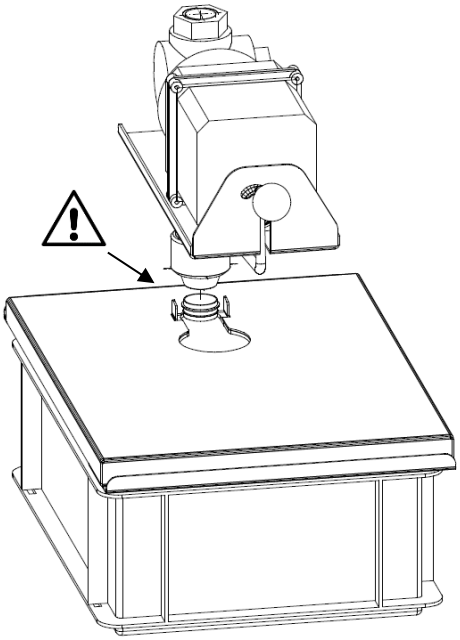

4.6.2 Grease separator

Optional a grease separator can be installed instead of the grease collector bag. Refer to the grease separator documentation for details.

4.7 Switching-off the unit

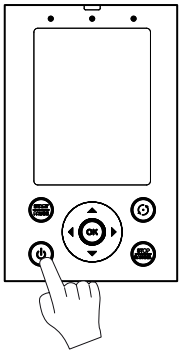

Press ON/OFF button and hold for approx. 3 seconds.

4.8 Emergency stop

WARNING
Remove the key from the switch during operation to enable quick pressing.

This is a key switch. Use the emergency stop switch when a situation arises that makes it necessary to switch off the unit immediately or cut the electricity.

Remove the plug from the wall socket after activating the emergency stop, depending on the reason.

Keep this key in a place that requires conscious consideration prior to restarting the unit.

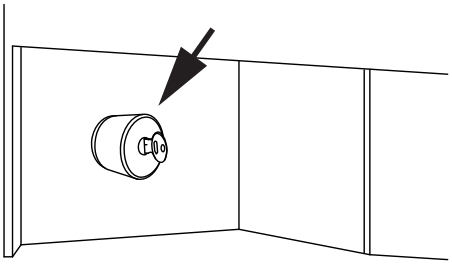

5. OPERATE

WARNING
Check whether a new grease collector bag has been installed

5.1 Starting a program

1. Press the left-hand selection button.
2. Select the required program. The total duration of the program is shown in minutes next to the name of the program.
3. Press START/PAUSE.

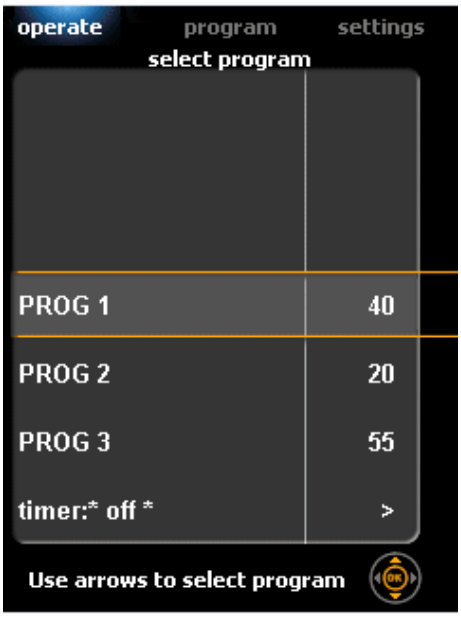

Use the rotation pad or arrow buttons to toggle between the programs.

- **timer:* off *** Is the timer program (see section 5.7).
- **CLEAN** refer to the automatic cleaning program (see section 8.1).

5.2 Change Grease Bag (only Deli Multisserie)

Prior to starting the program, an empty grease bag must be in place.
Be sure an empty grease bag is in place and press OK to continue.

5.3 Pre-heating

When the pre-heat function is activated, the unit will start this function after selecting this program.

The screen will display the current temperature (on the right) and the set pre-heat temperature (at the bottom).

When the set temperature is reached, the screen will show: “Load products” and a sound is activated.

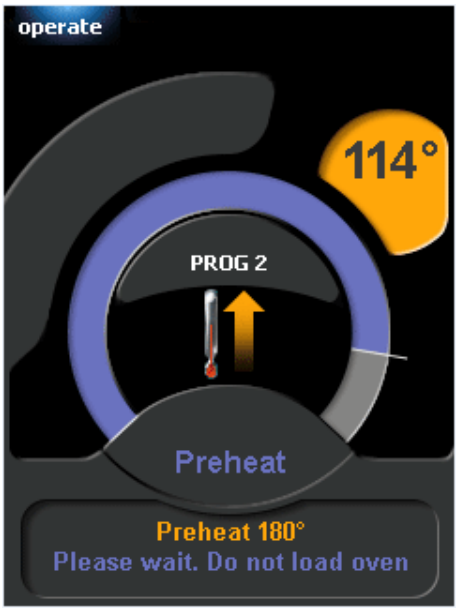

5.4 While cooking

WARNING

Opening the door during a grilling program, a baking program or a cleaning program causes the Multisserie to stop and a warning is shown. The Multisserie will continue when the door is closed.

During the cooking process, the display shows a graph with the planned trajectory (orange time line) and the set temperature (light orange field).

In the center the graph, the program name current function and remaining time are shown.

In the bottom of the screen the process steps are given.

In the top left section pictogram(s) of active functions are shown.

When ‘cook correction’ is switched-on the remaining time can be automatically adjusted.

5.5 Adding extra time to the active program

During the process extra time can be added, by following the next steps:

1. Press the power button.
2. Set extra time by rubbing the rotation pad.
3. Select the arrow point right to save setting.
4. Press OK.

The display now shows the extra time, which will be added to the last cooking step. The screen always shows the total amount of extra time.

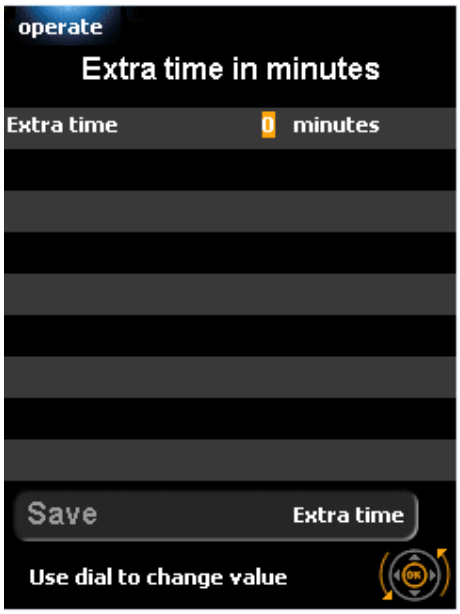

5.6 Interrupt a program

Interrupt temporarily:

1. Press START/PAUSE.
2. Press START/PAUSE again to resume the program.

Interrupt definitely:

1. Press STOP/CANCEL.
2. Select “yes”.
3. Press OK.

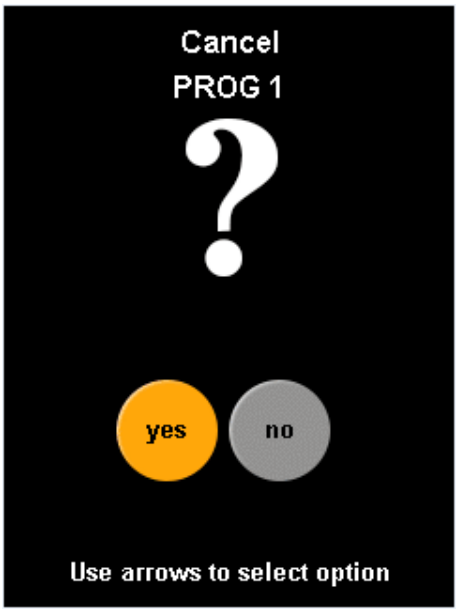

5.7 Set the timer

This function allows the user to automatically start a program on a pre-determined date and time.

To enable this function, the “timer function” in the Manager menu must be set to “YES”.

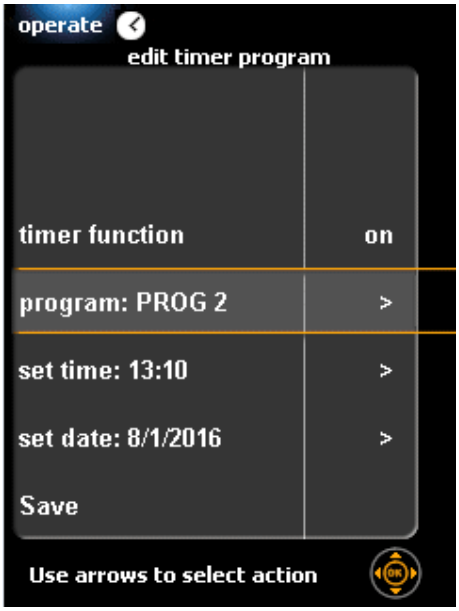

1. Select the recipe “timer:*off*.
2. Press OK.
3. Use the arrows to change the setting “timer function” from “OFF” to “ON”. This setting switches the timer off or on.
4. Press OK twice.
5. Use the arrows to select the desired program, and press OK.
6. Select “Set time” and press OK.
7. Set the desired time using the rotation pad. By pressing OK you switch form hours to minutes, and consequently to “save”. Press OK to save the time setting.
8. Select “Set date”.
9. Select the desired date using the right and left arrow.
10. Select “store” to save the timer settings, and to quit the menu.
11. Once the timer has been set, the top-left of the display will show a flashing clock-sign.

5.8 Reset alarm signal

When an alarm signal has been set, it will sound. To stop this signal, press OK.

5.9 Power down

If no program is active and no key is touched within the next 60 minutes the unit will switch-off automatically.
Press ON/OFF for some seconds to re-start the unit.
This option can be both switched-off or adjusted by a service engineer.

6. SETTINGS

6.1 General

The settings of the unit can be changed by using the control panel.
There are three kinds of settings:

- Information
- Manager
- Service

6.2 Information

6.2.1 Access

1. Activate the settings menu (right selection button).
2. Select “information”.
3. Press OK.

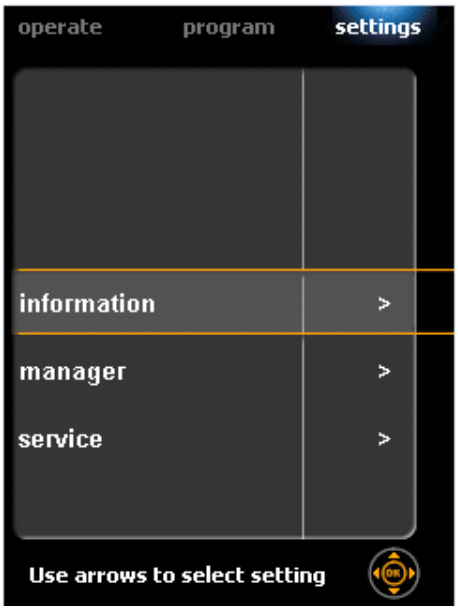

6.2.2 Overview

The screen shows, for a predefined time, an overview with some pre-programmed settings.

Pressing any knob to return to the setting menu instantaneously.

6.3 Manager

The Manager menu is used to set the parameters.

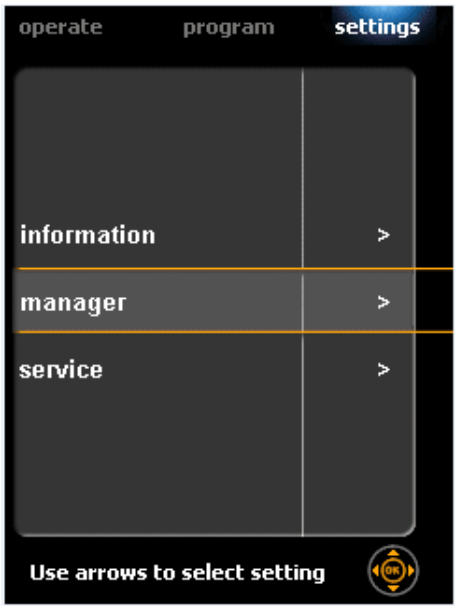

6.3.1 Access

1. Activate the settings menu (right selection button).
2. Select “manager”.
3. Press OK.

When a pin code has been set:

1. Use the rotation pad to enter the pin code.
2. Press OK or the right arrow to enter the next number.
3. Press OK twice.

6.3.2 Overview parameters

Setting	Function and values
Change pin code	Setting the pin code for access to the Manager Menu. This pin code can also be used for access to the Program Menu. • 0000 – 9999
Save recipes	• to save recipes on an USB stick
Load recipes	• to load recipes from an USB stick
Load recipes messages	• to load recipes messages from an USB stick
Light	• ON – OFF
Temperature	• °C – °F
Volume Unit	• Litre – Gallon
Set time	Setting the current time
Set date	Setting the current date
Time format	• 24h – AM/PM
Date format	• D/M/Y – M/D/Y
Alarm signal	• YES – NO
Pre heat mode	• NO: never a pre heating • 1X: pre heating ONCE, after switching on the unit. • YES: always pre heating
Pre heat delta	Correction on the pre-heat temperature based upon the operation temperature. • -50°C(-90°F) – +50°C(+90°F)
Auto recipe start	• NO – YES
Buzzer set	• Beep 1 – 5
Key beep	• ON – OFF
Water capacity	• 50 – 30000, “–“ (Liter) / 100 – 7925, “–“ (Gallon)
Lime filter	The displayed value shows the remaining capacity of the lime filter in percentage.
Lime filter replaced	Reset the lime indicator back to 100%
Clear error	• NO – YES (when error is present)

6.4 Service Menu

The service menu contains settings for the language and security of the unit. This can only be accessed by the supplier or a service technician.

7. PROGRAM

7.1 General

Your dealer has programs that are loaded into the unit by means of a computer. These programs vary with the composition of the product and the customer's desire, and are customer dependent. You can protect the cooking programs and the 'secured settings' by changing pin code "0000" in the menu, into any other pin code. By changing the pin code back into "0000", the protection is removed.
The program menu is used to store programs yourself. A program can have not more than 9 steps. In each step both the temperature and time can be set. The memory can handle 250 programs.

Access:
Activate the program menu (middle selection button).

If a pin code has been set:

1. Use the rotation pad to enter the pin code.
2. Press OK or the right arrow to enter the next number.
3. Press OK twice.
4. Select the desired action.

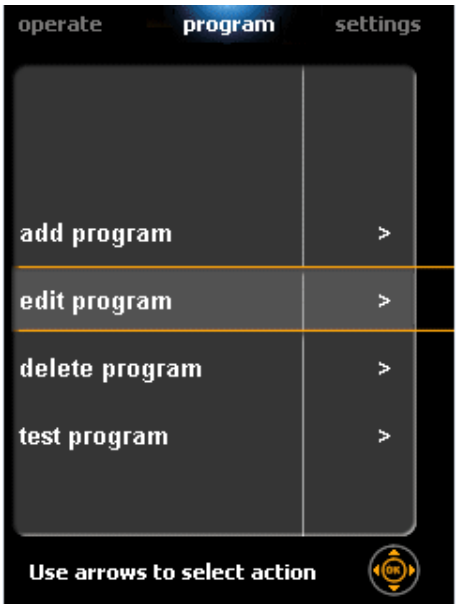

7.2 Adding programs

1. Select "add program".
2. Press OK.

7.2.1 Enter the program name

1. Enter the first character by using the rotation pad.

The name can consist of:

- letters: "A – Z"
- numbers "0 – 9"
- and character "-" or "blank"

The combination is free to choose. A name cannot have more than 11 characters, including blanks. You can create a blank by skipping a position. This can be done by pressing the right arrow.

2. Press OK or the right arrow to go to the next position.
3. Repeat steps 1 and 2 for the letter/number of the name, if needed.
4. Select the next position with the right arrow.
5. Press OK twice to store the name and to proceed.
6. Select "next".
7. Press OK

7.2.2 Programming cooking step

The table on the screen contains the following columns:

- Core (probe) temperature
- Time duration
- Temperature
- Fan speed
- Steam mode
- Number of steam pulses
- Ventilation/drying valve position

Row 1 shows step 1, row 2 shows step 2, etc.
There can be no more than 9 steps.

A selected cell shows an orange frame. To alter a cell, it needs to be 'opened' by selecting it and pressing OK. The color of the selected cell turns orange.

The end of a grilling step can be determined by setting a duration for the step or a desired core temperature for the products. The core temperature of the products is determined by sticking the core temperature sensor into one of the products.

Setting the time duration **or Core temperature**[1]

1. Select the core temperature or the time duration of the first cooking step. This is the value in the top-left cell or the cell next to the upper left cell of the table.
2. Press OK to open the cell. The cell background turns orange.
3. Set the core temperature or the time duration of the step using the rotation pad.
4. Choose "-" to skip the step.
5. Press OK to close the cell and save the setting.

The first cooking step can be set as the pre-heat step. Set the time setting to "PRE".

Setting the temperature

1. Use the right arrow to select the cell in the third column.
2. Press OK to open the cell.
3. Set the temperature using the rotation pad.
4. Press OK to close the cell and save the setting.

Set the fan speed

1. Choose by moving the arrow to the right the cell in the fourth column.
2. Press OK.
3. Set the fan speed (1 = low; 2 = high).
4. Press OK to close the cell and save the setting.

[1] Only for Deli Multisserie.

Set the steam input

1. Choose, by moving the arrow to the right, the cell in the fifth column.
2. Press OK.
3. Set the steam mode (0, 1 or 2):
   - 0 = Set number of pulses, at the beginning of a baking step. With a 3 second interval,
   - 1 = Set number of pulses per minute,
   - 2 = Same as steam mode 1, but the first pulse takes extra-long.
4. Press OK to close the cell and save the setting.
5. Choose, by moving the arrow to the right, the cell in the sixth column.
6. Press OK.
7. Set the number of steam pulses. (- = no steam)
8. Press OK to close the cell and save the setting.

Steam modes

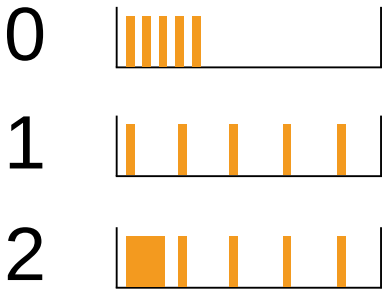

Set the ventilation valve position (not for units with condenser)

1. Choose, by moving the arrow to the right, the cell in the seventh column.
2. Press OK.
3. Set the valve position:
   - closed = valve is closed while the step is being gone through.
   - open = valve is open while the step is being gone through
4. Press OK to close the cell and save the setting.

Next cooking steps
Select the first cell of the next cooking step to add another cooking step.

7.2.3 Keeping warm (HOLD)

Steps 2 - 9 can be set to keep the products warm. Set the time setting to “HOLD”.
A “keeping warm” step lasts infinitely and it keeps the unit at the desired temperature.
The temperature must be set on at least 85 °C (185 °F).

A warming step is only performed when this is the last step of the program.

7.2.4 Saving the program

1. Select “saving program”.
2. Press OK.

7.3 Edit programs

1. Select “Edit program”.
2. Press OK.
3. Select the required program.
4. Press OK.

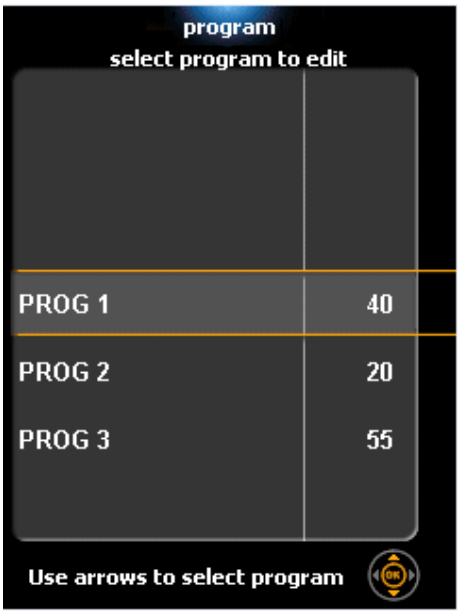

Edit the program name

1. Select the position of the character.
2. Change the character using the rotation pad.
3. Use a ‘blank’ to erase a character
   (You can find this character in alphabetic order before the letter A.)
4. Repeat steps 1 and 2 if needed.
5. Select next.
6. Press OK.

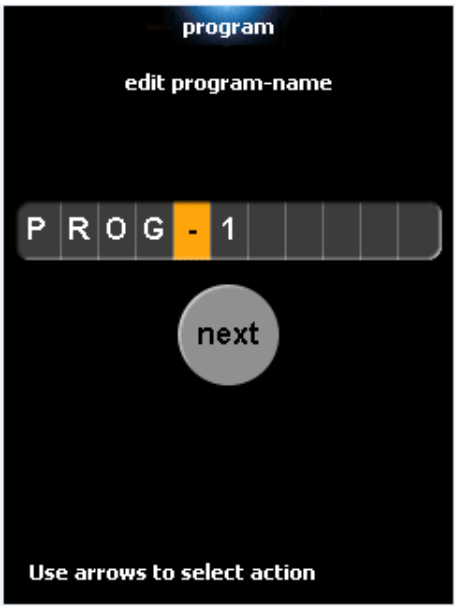

Edit the cooking steps

1. Select the cell.
2. Press OK. The cell background turns orange.
3. Set the value using the rotation pad.
4. Press OK to close the cell.
5. Repeat steps 1 - 4 if needed.
6. Select “save program”.
7. Press OK.

7.4 Deleting programs

Deleting of a program cannot be undone.

1. Select “delete program”.
2. Press OK.
3. Select the program.
4. Press OK.
5. Check whether the program name matches the program you wish to delete.
6. Select “yes” if this is the case. Select “no” if not.
7. Press OK.

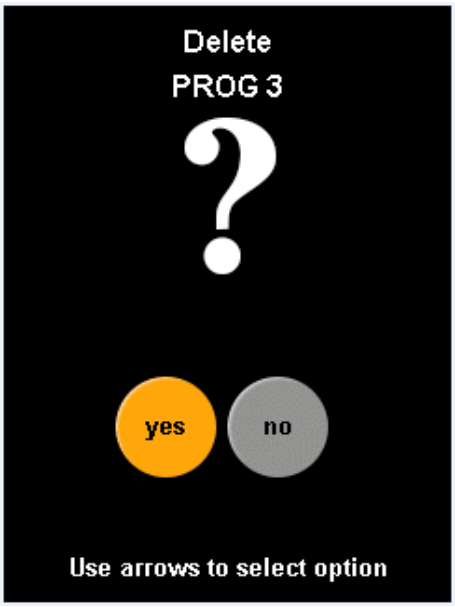

7.5 Testing the programs

In the test-mode the program will run normally, but the settings can be changed during the process.

Changes that are made (during testing) in the steps that already are passed, will not affect the products in the unit. However, the changes will be stored and will be active the next time the program is executed.

The changes that are made, will be stored during the test-mode.

1. Select “test program”.
2. Press OK.
3. Select the program.
4. Press START/PAUSE or OK.

The process will be running identically to the normal execution of a cooking program. During the process the program can be changed.

1. Press OK.
2. Apply the changes.
3. Select “save program”.
4. Press OK.

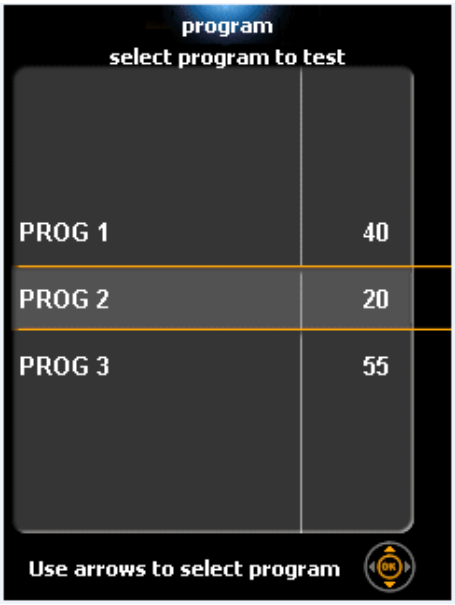

7.6 Sorting programs

This function allows you to sort programs alphabetically.

1. Select “sorting alphabetically”.
2. Press OK.
3. Use arrows to select “yes”.
4. Press OK.

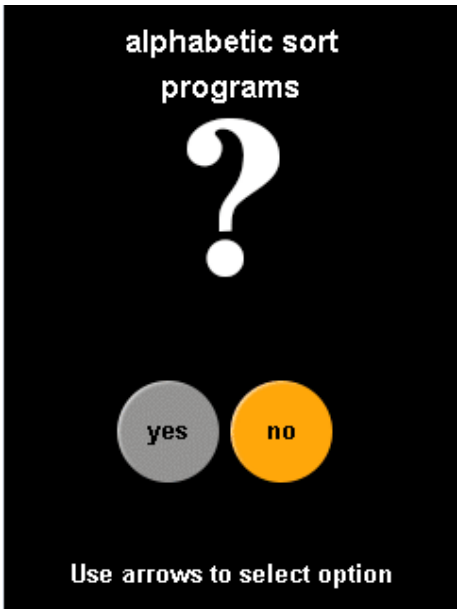

7.7 Automatic switch-off

When there is no active program and no key has been touched for over 60 minutes, the unit will automatically switch off.

To switch the Multisserie back on, press the “on/off” key for two seconds. This option can be altered or disabled by a service agency. For more information, contact your service agency or your dealer.

8. CLEANING AND MAINTENANCE

WARNING

Appliance must be disconnected from the power supply during manual cleaning or maintenance and when replacing parts.

Do not use aggressive or abrasive materials. These will damage the surface which will make it more difficult to remove dirt.

Clean the inside, the removable parts and the accessories thoroughly with cleanser and water before putting the unit into use. Follow the cleaning instructions as described in this chapter.

Treat the outer surface of the interior window with a soft cleaning agent to protect the reflection layer.

Cleaning should not be delayed beyond 8 hours of service.

Wear rubber gloves when cleaning

Make sure the filters in the fan plate in front of the fans and the area behind the fan plate are kept clean.

WARNING

Never use a water hose for cleaning. Water can seep into the unit through the ventilation holes of the unit.

8.1 Periodic maintenance

Item	Action	Frequency
Interior	• Clean the interior, see section 8.2	Daily
Exterior	• Clean the exterior using little water, cleaning agent, a soft brush or a sponge. • Dry the exterior with a cloth. • Use Stainless Steel cleaning spray to remove stains, and restoring the gloss.	Weekly
Cooking area	• Pay attention to proper cleanness of items inside the oven. • Put back all accessories.	Weekly
Glass panes	• Open the outer door. • Open the inner door. • Clean the glass panes with warm soapy water or grill cleaner.	Weekly
Drip tray	• Flush the drip trays located under the inner glass and the rubber with hot water. This to prevent obstruction in the drain and drip trays.	Weekly
Anti-scale filter (if present)	• Check the anti-scale filter for saturation and how long it has been in use. • Replace the cartridge when the filter is saturated.	Weekly
Grease filters (Deli Multisserie)	• Replace the grease filters with the supplied additional ones. Remove a filter by lifting it and then pulling it towards you. • Clean the used filters in a dishwasher or by letting them soak in hot grease solvent for a few hours.	Weekly
Drain	• Clean the drain with a drill brush. To do this the grate has to be lifted and the drainage brushed up to end of the ball valve.	Monthly

Fan plate	• Remove the filters from the fan plate. • Remove the 4 wing nuts; the fan plate will now come loose. Remove the fan plate. Avoid bumping against the fan blades to prevent imbalance. • Clean the area behind the fan plate using grill cleaner. • Clean with hot soapy water.	Monthly

For hygiene matters and optimum state of your Multisserie, it is advised to maintain a fixed daily cleaning schedule.

8.2 Daily Cleaning

8.2.1 Automatic cleaning cycle

WARNING
Accessories must be removed from the equipment during the cleaning program.

Clean the door rubbers after the cleaning process with a damp cloth. This will considerably extend their life span.
The cleaning programs runs completely independently.
In order to save energy, switch off the lighting before starting the cleaning program.

The equipment has been provided with 2 cleaning programs:

- **DAILYCLEAN** – The equipment is contaminated
- **RINSE** – The equipment just needs rinsing

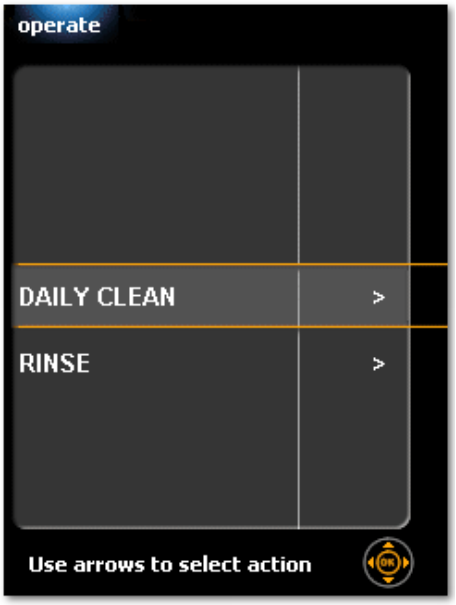

DAILY CLEAN
The following steps will be executed (the cleaning program takes about 180 minutes).

1 Cool down/heat up
2 Spraying detergent
3 Soaking
4 Steam
(3x)
5 Rinse
6 Rinse with softened water
7 Blow tubes empty
8 Dry

After finishing the cleaning program, the unit switches off automatically.

RINSE
Rinse can be de-activated in the Service Menu.

8.2.2 Installing the spray arm (only for Bakery Multisserie)

Install the spray arm (A) for automatic cleaning in the Bakery Multisserie in the following way:

1. Remove baking trays or gourmet pans.
2. Remove the stabilizer plate (B) at the bottom of the rack.
3. Remove the bar with cover plate (C) in the middle above the drainage.
4. Unscrew the wing nut in the bush (D) on the spray arm and slide the bush down.
5. Slide the bottom part of the spray arm on the support in the middle of the drainage.
6. Slide the bush (D) up, but leave a gap of approx. 2mm (0.08 inch).
7. Tighten the wing nut.

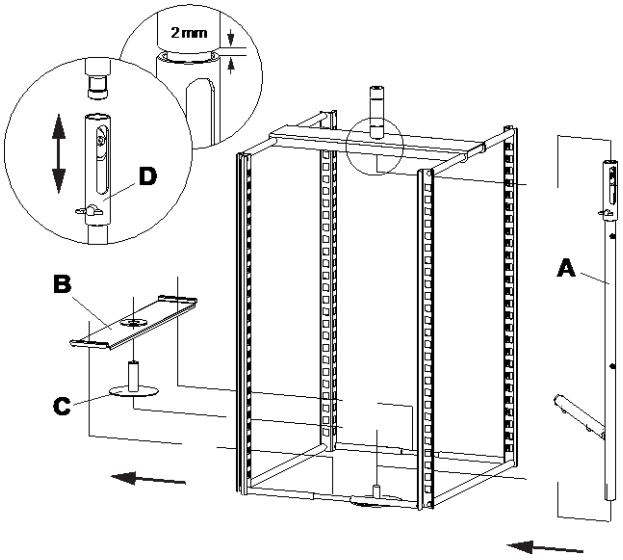

8.2.3 Start the cleaning program

WARNING

Opening the door during a grilling program, a baking program or a cleaning program causes the Multisserie to stop and go to fault state. The Multisserie will continue when the door is closed.

1. Remove rough fat residues at the drainage grate. The drainage must provide a free flow through during cleaning
2. Check to be sure that there is sufficient cleaning agent present (arrow 1), otherwise exchange bottle.
3. Press the left-hand selection key.
4. Select CLEAN.
5. Press OK.
6. Choose the required cleaning program
7. Press OK

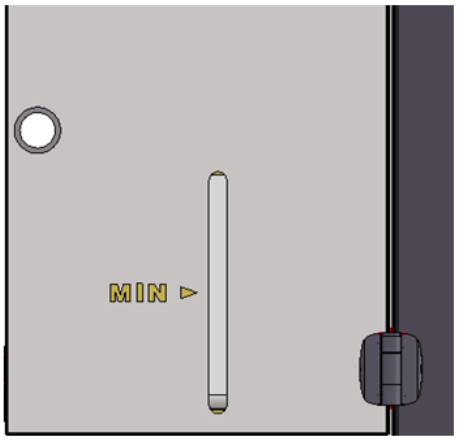

Contact your supplier for the appropriate cleaning agent.
Consumption per cleaning cycle: approx. 1500 ml.

The equipment will now clean itself completely independently. The screen shows the status of the program.

8.2.4 After cleaning

Check the following matters before putting the equipment into operation again:

1. Clean the door rubbers with a damp cloth. This removes any last residues of cleaning agent and lengthens the lifetime of the rubbers.
2. Clean the receptacles below the windows and pierce the drainage hole with the brush. Open the interior window for easy access.
3. If required the bottom and the windows can be cleaned with a little cleaning vinegar to remove possible calcium build-up.
4. Clean the control panel and possible other dirty areas on the unit exterior with hot soapy water or “Fri-Jado Cleaner”.

8.2.5 Change cleaning agent

WARNING

Do not use any cleaning agent other than “Multisserie Cleaner”. Fri-Jado has carefully selected and tested the cleaning agent.

Prevent immediate contact with the cleaning agent. It may irritate a sensitive skin.

Wear rubber gloves.

There is a bottle of cleaning agent in the base. This bottle supplies cleaning agent to the equipment. Change the bottle when there is not enough cleaning agent left.

1. Open the door in the under frame to get access to the bottle of soap. Remove the bottle from the under frame.
2. Unscrew the swivel ring with the hoses from the empty bottle.
3. Take the complete hose out of the bottle.
4. Unscrew the cap from the new bottle of soap.
5. Place the hose in the new bottle.
6. Screw the swivel ring on the new bottle.
7. Place the new bottle back in the under frame and close the door.

8.2.6 Clean the accessories

1. Place the detachable parts in a wide rinsing container filled with hot water and an appropriate cleaning agent.
2. Soak these parts for one night and clean them the next day.

9. MALFUNCTIONS AND SERVICE

Before you contact your supplier/dealer in case of a malfunction, there are some items you can check yourself:

- Is the power supply working properly? Check fuses and differential switch.
- Has the timer clock been properly set?

Item	Malfunction	Possible action
Cleaning	Leaks water during cleaning	• Door not closed correctly. • Check door seal, replace if necessary.
Cleaning	Oven not clean after cleaning cycle	• Not enough detergent, check supply. • No water supply, check. • Drain polluted, clean. • Drain valve not working properly, check.
Core-temperature sensor	The core temperature is reached but checks show that the product temperature is too low	• Make sure the sensor has been entered into the product properly
Fan	Fan not spinning	• Remove the plug from the socket. • Open the door. • Remove fan plate and check what's blocking the fan blade.
Fan	Noisy fan	• Fan polluted, clean.
Humidification	The humidification is not functioning	• Check the water supply
Lamp	Does not light up	• Set OFF in manager menu. • Defective: replace, see section 0.
O-ring	An O-ring on the tube, on which the spray arm is placed, is damaged	• Immediately remove the O-ring • Carefully install a new O-ring. (Silicone 10.77 x 2.62 mm).
Oven	Product is not getting done equally	• Try a lower cooking temperature. • Check fuses and/or the differential switch.
Oven	Program does not start	• Check if all doors are closed correctly.
Mains cord	Damaged	• Replace, see section 9.1.

9.1 Replacing the mains cord

WARNING

Hazardous electrical voltage.

If the mains cord is damaged, it must be replaced by the manufacturer, his service agent or a similarly qualified person in order to avoid hazards.

9.2 Replace a lamp

WARNING

Remove the power plug from the wall socket.

WARNING

Do not touch the lamps with bare hands. **Use a clean cloth or paper tissues when replacing the lamp.**

Remove any moisture with alcohol or methyl spirits after the lamp has cooled down.

1. Remove the plug from the wall socket.
2. Remove the 4 screws from the lamp holder. Beware, the frame, glass and gasket will come off at the same time.
3. Remove the defective lamp. Move the lamp along the length to one side of the lamp holder.
4. Install a new halogen lamp (230 V – 150 W R7s – 78 mm):
5. First press one side of the lamp into the lamp holder (A). Press lamp in its correct position (B) and use its spring pressure to make contact with the other terminal.
6. Make sure the lamp is correctly clamped between the two terminals (C). If this is not the case, the lamp can move freely along its length-direction, until it is fixed into its terminals.
7. Install the gasket, glass and frame .

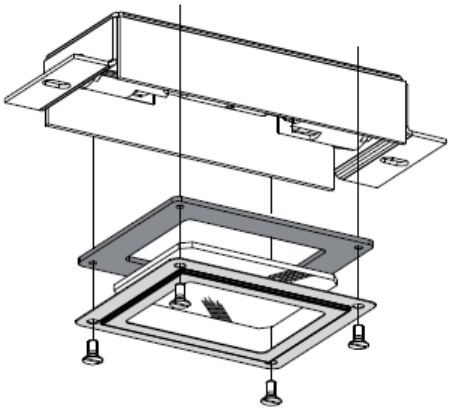

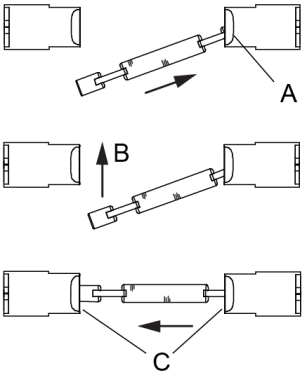

10. TECHNICAL SPECIFICATIONS

WARNING

Consult the identification plate to get the proper specifications of the unit. The electrical data may vary from country to country

European Models

			MTS
Dimensions	Width	mm	970
	Depth	mm	1260
	Height on stand	mm	1890
Weight	Gross	kg	519
	Net	kg	441
Maximum ambient temperature		°C	35
Sound pressure		dB (A)	< 70
Electrical installation	Voltage	V	3N~ 400/230
	Frequency	Hz	50/60
	Required power	kW	20.6
	Max. nominal current	A	30.5
Plug2	CEE-form	A	32
	length	m	approx. 2.6
Water connection	Aerated	inch	$^3/_4$
Water	pressure	kPa	200 – 500
Drain	Open connection	mm	min. 40
Cleaning agent		mL	approx. 1500/cycle

American Models

			MTS
Dimensions approx.	Width	inch	38 ¼
	Depth	inch	49 ¾
	Height on stand	inch	74 ½
Weight	Gross	lbs	1144
	Net	lbs	972
Maximum ambient temperature		°F	95
Sound pressure		dB (A)	< 70
Electrical installation	Voltage	V	3N~ 208/120
	Frequency	Hz	50/60
	Required power	kW	20.6
	Max. nominal current	A	60
Plug	N/A (fixed wiring)		
Water connection	Aerated	inch	$^3/_4$
Water	pressure	kPa	200 – 500
Drain	Open connection	inch	min. 1 $^5/_8$
Cleaning agent		mL	approx. 1500/cycle

2 Depending on Country

11. OPTIONS AND ACCESSORIES

For the Multisserie the following options are available:

- Condenser

For the Multisserie the following accessories are available:

Deli Multisserie

- Chicken rack
- Multi-purpose basket
- Closed insert for multi-purpose basket
- Grease disposal bags

Bakery Multisserie

- Baking tray 400 x 600 mm
- Baking tray 400 x 600 mm perforated
- Baking tray 400 x 600 mm perforated coated
- Baking grid 400 x 600mm
- Silicone mat 400 x 600

General accessories:

- Locking door handle
- Water filtration system
- Water filtration cartridge
- Oven gloves
- Oven gloves, long
- Fri-Jado Multi Cleaner

Fri-Jado Inc.
1401 Davey Road, Suite 100
Woodridge IL 60517
USA
Tel: +1-630-633-7950

www.frijado.com