SERVICE MANUAL

COLD DELI 2/3/4/5 MERCHANDISERS

MODELS

Full service curved

Full service square

CD 4 on underframe

CD 4 Square on underframe

- NOTICE -

This manual is prepared for the use of trained Service Technicians and should not be used by those not properly qualified. If you have attended training for this product, you may be qualified to perform all the procedures in this manual.

This manual is not intended to be all encompassing. If you have not attended training for this product, you should read, in its entirety, the repair procedure you wish to performto determine if you have the necessary tools, instruments and skills required to perform the procedure. Procedures for which you do not have the necessary tools, instruments and skills should be performed by a trained technician.

Reproduction or other use of this Manual, without the express written consent of Fri-Jado, is prohibited.

fri-jado

USA

EMPTY PAGE

Versions		
Version	Issue date dd/mm/yy	Remarks
03/2015	01/03/2015	First release.

INDEX

Index **4**

General technical data **6**
Technical data 6

Programming instructions **7**

Removal and replacement of parts **8**
Panels left, right and middle back side 8
Contactor 8
Electronic ballast for lighting/transformer 9
Tumble switch light and cooling 9
Blower plate 9
Thermostat Johnson MR4 10
Thermostat FK400T evaporator tray 10
Temperature sensor 11
Defrost sensor 12
Blower(s) 13
Replacing a lamp 14
Gas spring curved model 14
Front grip magnets curved model 15
Curved glass 15
Curved glass (alternative procedure when torques key is not available) 16
Gas spring square model 17
Front glass door square model 18
Protection profile in front (bumper) 19
Side plate left and right, front side curved model 19

Electrical tests and service procedures **21**
PTC 1000 sensor test 21
Temperature standard compliance 21
Johnsons MR4 settings 23
Control location full serve main thermostat 26
Control location full serve thermostat evaporator tray 26

Troubleshooting **27**
Cold Deli 2/3/4/5 full serve 27

Exploded views & partlists **28**
Cold Deli 2 Assembly drawing 28
Cold Deli 2 components drawing 30
Cold Deli 3-4-5 Assembly drawing 32
Cold Deli 3-4-5 components drawing 36
Cold Deli 2 Square Assembly drawing 38
Cold Deli 2 Square components drawing 40
Cold Deli 3-4-5 Square Assembly drawing 42
Cold Deli 3-4-5 Square components drawing 46

Circuit diagrams **48**

EMPTY PAGE

This manual covers the Cold Deli Merchandisers in the models curved and square. The Merchandisers are available in 4 sizes which can be built into existing counters. Merchandisers are delivered on an under frame.
The Merchandiser is available in the Full Service version. This version is executed with a flat presentation plate and a frame for gastronorm trays.

All of the information, illustrations and specifications contained in this manual are based on the latest product information availble at the time of printing.

TECHNICAL DATA

Type	CD 2	CD 3	CD 4	CD 5
Power (W)	1250	1300	1500	1500
Fuses needed with power connection 115V, 1N ~ 60Hz (1 phase with zero)	1x 15 A	1x 15 A	1x 20 A	1x 20 A
Standard plug from factory (NEMA)		5-20P	5-20P	5-20P
sound pressure	< 70 dB(A)	< 70 dB(A)	< 70 dB(A)	< 70 dB(A)
Temperature class Full Service acc. to NSF 7*	Type I	Type I	Type I	Type I
Net Weight (lbs)	478	523	595	703
Gross Weight (lbs)	503	552	640	750
Heigth (inch)	56	56	56	56
Width (inch)	29 5/8	42 3/4	55 3/4	69
Depth (inch)	41 3/4	41 3/4	41 3/4	41 3/4
Heigth with base (inch)	56	56	56	56
Maximum Loading height (inch)	4	4	4	4
Refrigirant**	R134A	R134A	R134A	R134A
Amount of refrigirant (OZ)	15.4	16.8	22.9	23.8

* Product temperature class according to ISO 23953-2.
** The refrigerant complies with the environmental requirements applicable at the time of manufacturing of the unit.

Tools

- Standard set of tools.
- Metric wrenches, sockets and hex socket key wrenches.
- Multi meter and AC current clamp meter.
- Temperature tester.
- Insulation value tester (megger)

PROGRAMMING INSTRUCTIONS

DISPLAY SERVE OVER MODEL

Switch on

1. Switch on the lighting with switch 1.
2. Switch on the cooling with switch 2.

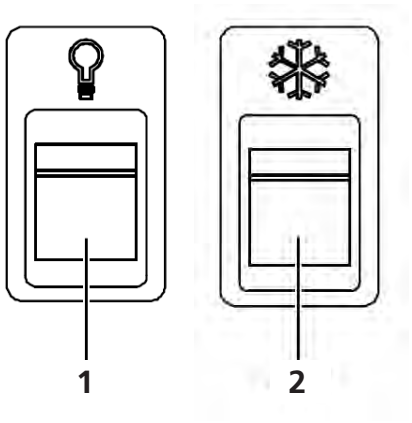

Switch off

1. Switch off the lighting with switch 1.
2. Switch off the cooling with switch 2.

Check set temperature

During use the temperature is shown on the display.

1. Press enter key for 2 seconds.

The set temperature will be shown on the display. The measured temperature will be shown again after 15 seconds.

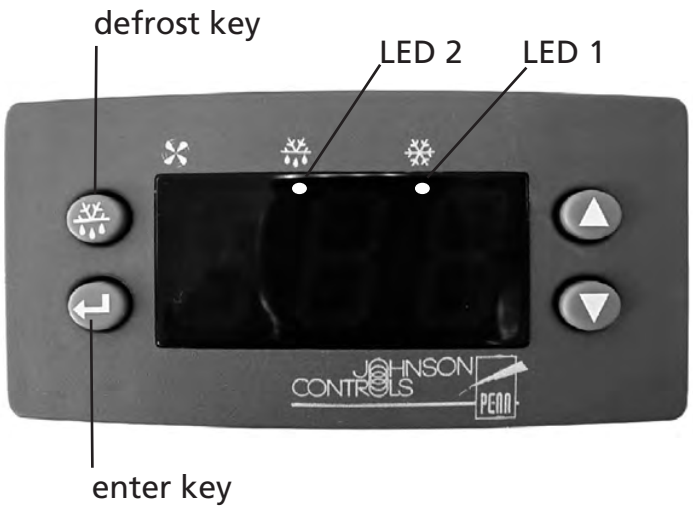

Check machine status

When the cooling unit has been switched on, the indicator LED 1 is lit.

LED 2 is lit during automatic defrosting of the evaporator.

Set the temperature

1. Press enter key for 2 seconds. In display the setpoint appears (32°F).
2. Change value with up or down key.
3. Press enter key to confirm.

Manual start of defrost cycle

Hold the defrost key for 3 seconds. Note: The temperature has to be lower than the setting of parameter dt (41°F).

WARNING: Disconnect the electrical power to the machine at the main circuit box. Place a tag on the circuit box indicating the circuit is being serviced.

PANELS LEFT, RIGHT AND MIDDLE BACK SIDE

1. Remove the socket screws that secure the panel to the frame.
2. Turn panel towards yourself.
3. Reverse the procedure to install.

Note: The panels can be lifted out from their hinges. First lift out the hinge on the middle panel.

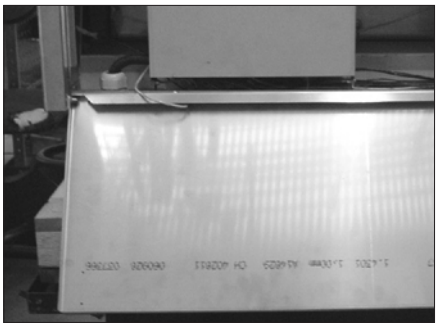

CONTACTOR

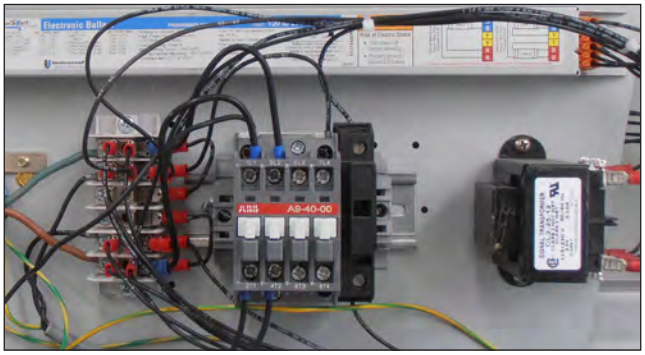

1. Remove the left, right and center panel according to prior procedures.
2. Disconnect the wiring on the contactor.
3. Remove the contactor from the rail.
4. Reverse the procedure to install.

ELECTRONIC BALLAST FOR LIGHTING/TRANSFORMER

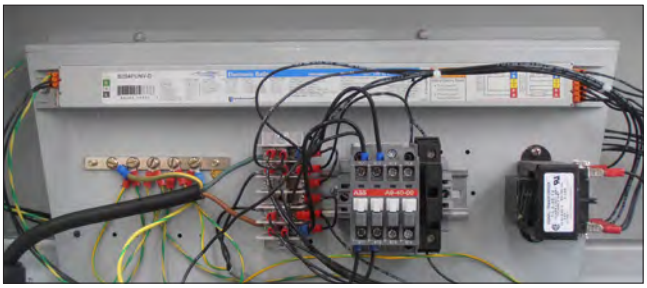

1. Remove the left panel according to prior procedure.
2. Disconnect the wiring to the electronic ballast or transformer.
3. Remove the screws securing the electronic ballast/transformer and remove it.
4. Reverse the procedure to install.

Note 1: The screws of the ballast are located underneath the wiring.

Note 2: For better access it might be required to remove the middle panel as well.

TUMBLE SWITCH LIGHT AND COOLING

1. Remove the middle panel according to prior procedures.
2. Disconnect the wiring.
3. Remove the switch by pushing the clamps on both sides.
4. Reverse the procedure to install.

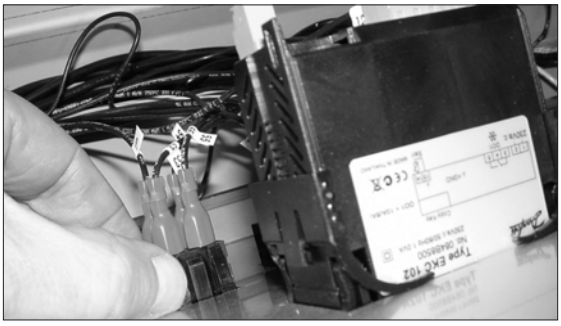

BLOWER PLATE

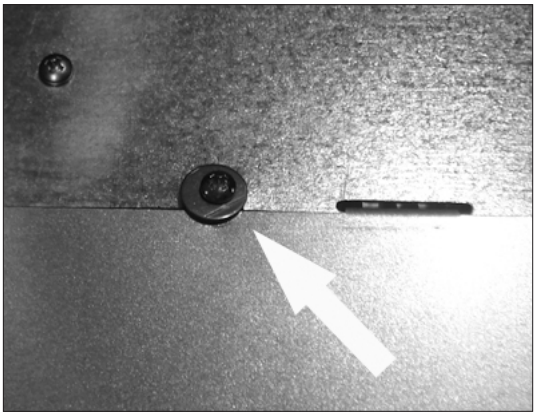

1. Remove the gastronorm trays or flat plate; there are two lifting eyes in the front of the flat plate which simplify this.
2. Remove the two screws with washers fixating the blower plate.
3. Turn over the blower plate by moving the top of the plate towards the front of the machine.
4. Reverse the procedure to install

THERMOSTAT JOHNSON MR4

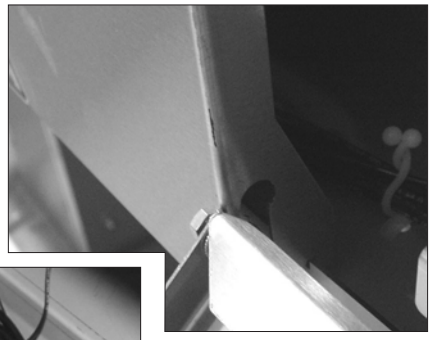

1. Remove the left and right hand panel according to prior procedure.
2. Remove the left and right back panel by lifting them out of the hinges.
3. Remove the socket screws that secure the middle panel and turn the panel towards yourself.
4. Loosen the blocking clips on the sides of the thermostat and remove the thermostat.
5. Disconnect the wiring.
6. Reverse the procedure to install.

Note: Check and adjust the parameters in the new thermostat. See page 22.

THERMOSTAT FK400T EVAPORATOR TRAY

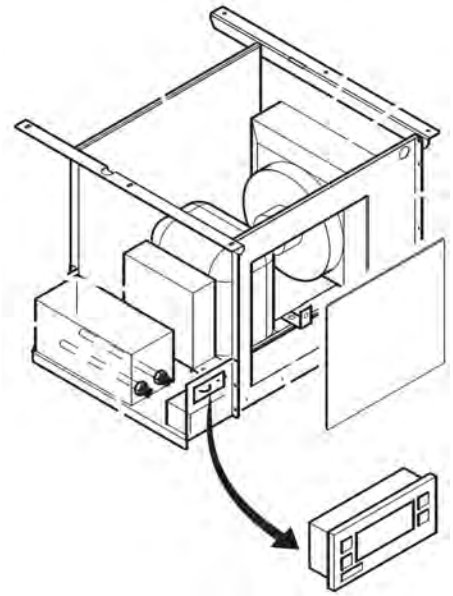

1. Remove the back panel of the underframe.
2. Loosen the blocking clips on the sides of the thermostat and remove the thermostat.
3. Disconnect the wiring.
4. Reverse the procedure to install.

Note: Check and adjust the parameters in the new thermostat. See page 24.

TEMPERATURE SENSOR

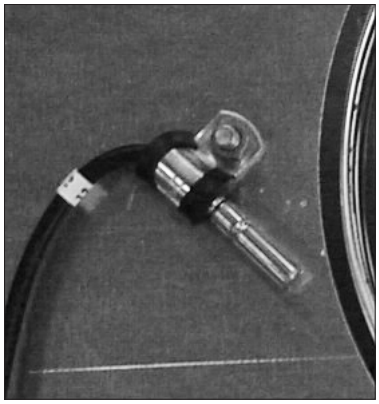

1. Remove the blower plate according to prior procedure.
2. Loosen the nut securing the sensor and remove the sensor.
3. Remove the rear panels according prior procedure.
4. Disconnect the wiring of the sensor on the thermostat and remove the sensor.
5. Reverse the procedure to install

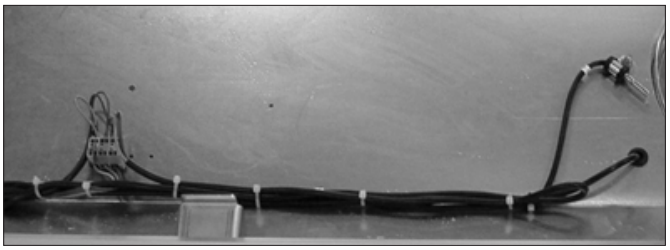

Note1: The sensor wiring will pass through the polyurethane foam (also known as PUR or Great Stuff foam), when installing the new sensor some extra sealant should be applied to recreate a watertight fit.

Note2: When refitting the sensor it is easiest to guide the wiring of the sensor through the hole starting in the product area.

DEFROST SENSOR

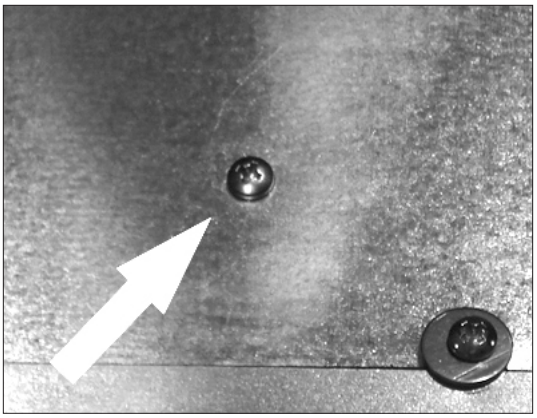

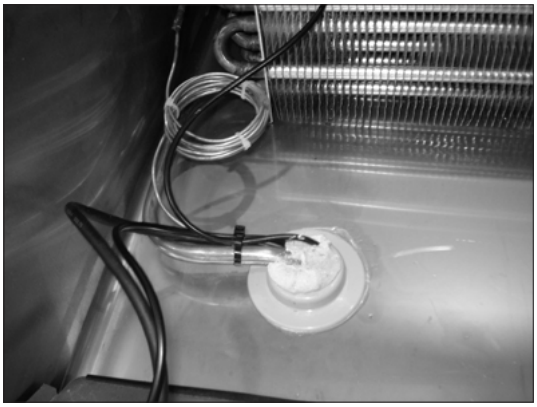

1. Remove the blower plate according to prior procedure.
2. Remove the four screws that secure the evaporator plate and remove the plate.
3. Remove the sensor from the evaporator by gently folding back the metal blades of the evaporator.
4. Remove the rear panels according prior procedure.
5. Disconnect the wiring of the sensor on the thermostat and remove the sensor.
6. Reverse the procedure to install

Note1: When removing the evaporator plate both rear corners of the plate may get stuck in the corners of the unit, some maneuvering and guiding by hand should solve this.

Note2: The sensor will pass through the polyurethane foam (also known as PUR or Greatstuff foam), when installing the new sensor some extra sealant should be applied to recreate a watertight fit.

Note3: when refitting the sensor it is easiest to guide the wiring of the sensor through the opening starting in the product area.

BLOWER(S)

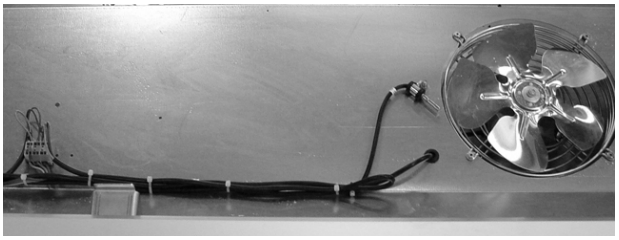

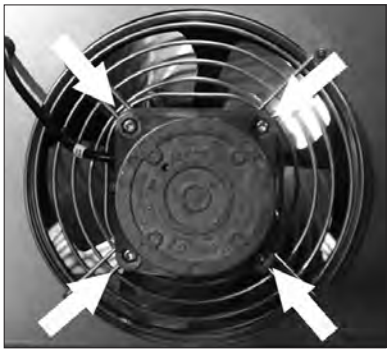

1. Remove the blower plate according to prior procedure.
2. Disconnect the wiring of the blower.
3. Remove the fan blade by unscrewing the bolt in the centre of the blade.
4. Remove the four screws securing the motor to the grill and remove the motor.
5. Reverse the procedure to install.

Note: The blower blade may be sharp.

REPLACING A LAMP

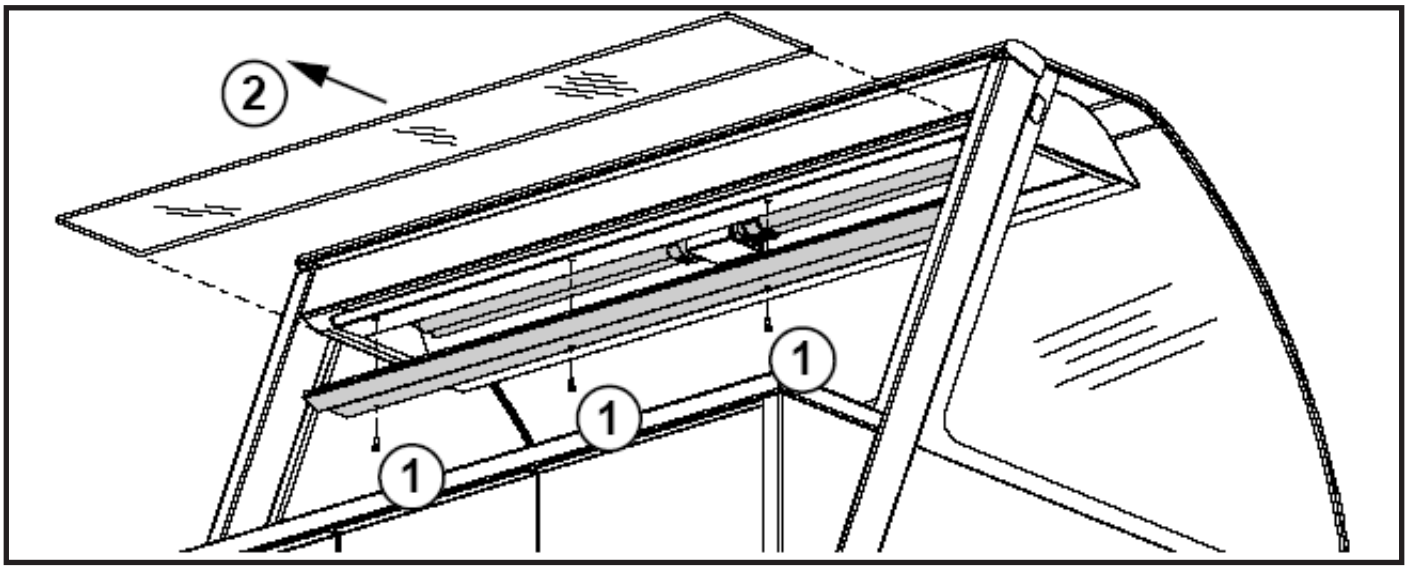

1. Remove the sliding doors from the unit (if present).
2. Dismount the window profile by removing the screws at the bottom side of the light cover (1).
3. Carefully slide the window out of the frame by moving it toward you and place it in a safe place (2).
4. Remove the PL lamp by pulling it lengthwise out of the holder. Do this carefully to avoid breaking.
5. Reverse the procedure to install.

GAS SPRING CURVED MODEL

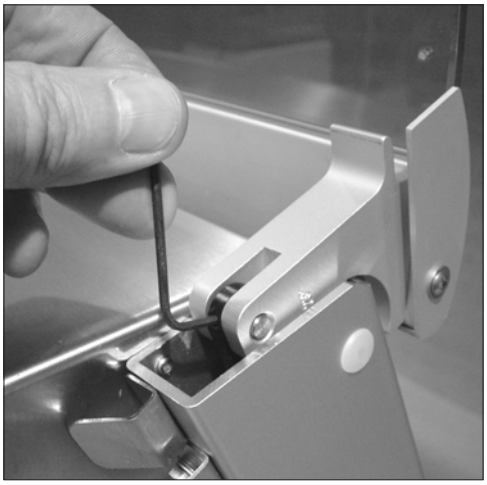

1. Turn the curved glass to the top position.
2. Loosen the adjusting screw on the gas spring.
3. Remove the pin out of the gas spring. Be aware of supporting the glass.
4. Remove the gas spring.
5. Reverse the procedure to install.

FRONT GRIP MAGNETS CURVED MODEL

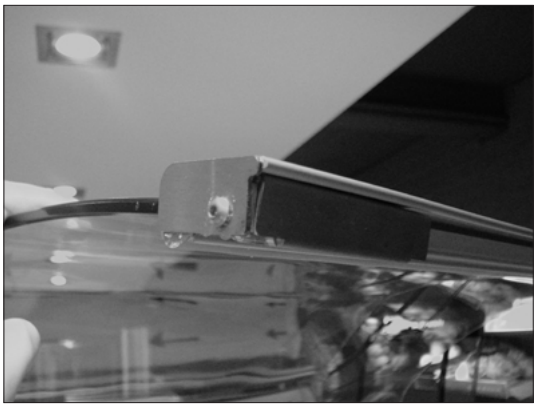

1. Remove the screw securing the side plate of the grip.
2. Remove the magnet holder by sliding it outwards, a controlled knock with a hammer might be necessary to remove the magnet holder.
3. Reverse procedure to install

Note: the appliance has two separate sets of magnet holders, another set is located inside the front profile.

CURVED GLASS

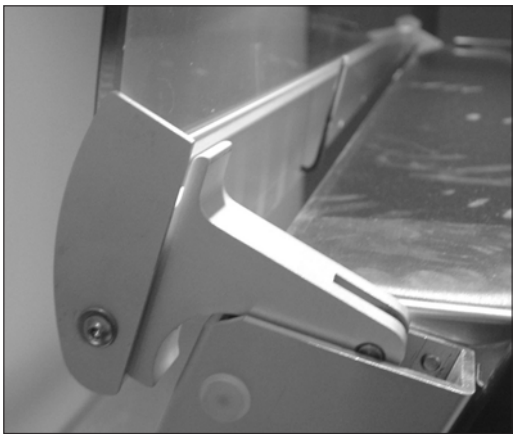

1. Turn the curved glass to the top position.
2. Remove the cover plates on the mounting profile (if necessary).
3. Loosen the adjusting screws that secure the glass with the special torques key TX15.
4. Remove the curved glass.
5. Remove the front grip magnets according to prior procedure.
6. Place the new glass with the plastic protection profile.
7. Reverse the procedure to install.

Note1: The cover plates are fixed with high temperature resistant sealant.

Note2: Special torques key (TX15) is supplied with the delivery of a new curved glass.

CURVED GLASS (ALTERNATIVE PROCEDURE WHEN TORQUES KEY IS NOT AVAILABLE)

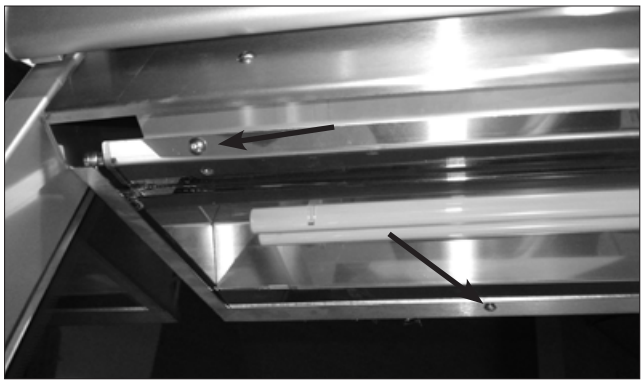

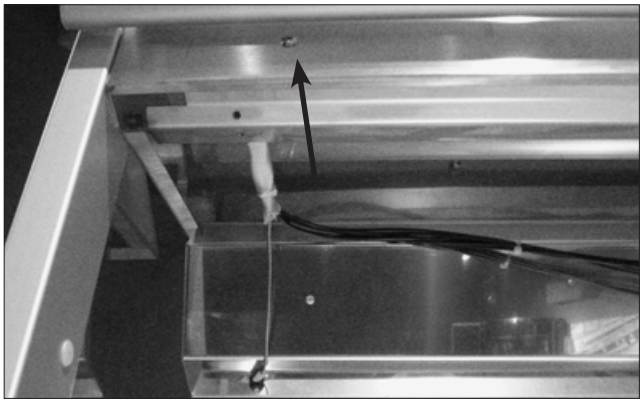

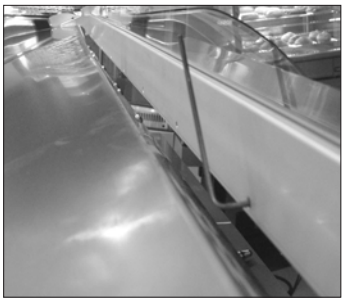

1. Remove the lighting glass according to prior procedure.
2. Remove the 2 socket screws of the lamp housing in the front and the 4 socket screws in the back and turn the reflector downward.
3. Remove the 4 socket screws of the frame that secures the lamp housing to the light fixture and remove the frame. As depicted in the second image.
4. Turn the curved glass to the top position.
5. Remove on left and right top side the upper bolts that secure the light fixture to the console.
6. Loosen the lower bolts on left and right top side.
7. Turn the light fixture downwards, to create extra space for a regular Allen key or torques key.
8. Loosen the adjusting screws that secure the glass.
9. Remove the curved glass.
10. Remove the front grip magnets according to prior procedure.
11. Place the new glass with the plastic protection profile.
12. Reverse the procedure to install.

GAS SPRING SQUARE MODEL

1. Turn the front glass to the top position.
2. Remove the screw on the bottom side of the gas spring.
3. Remove the pin out of the gas spring. Be aware of supporting the glass.
4. Loosen the adjusting screw on the top side of the gas spring.
5. Remove the pin out of the gas spring.
6. Remove the gas spring.
7. Reverse the procedure to install.

FRONT GLASS DOOR SQUARE MODEL

1. Turn the front glass to the top position.
2. Remove the screw on the bottom side of the gas spring.
3. Remove the pin out of the gas spring. Be aware of supporting the glass.
4. Remove the 2 screws on the top side and remove the gas spring.
5. Also remove the gas spring on the other side.
6. Take out the front glass and place this on a table.
7. Loosen the screws that secure the front glass and remove the glass.
8. Reverse the procedure to install.

Note 1: It is advisable to replace the glass door with the assist of a second person.

Note 2: Be sure that the black gasket is between the glass and alluminium profile.

PROTECTION PROFILE IN FRONT (BUMPER)

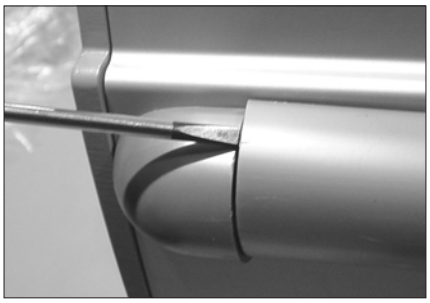

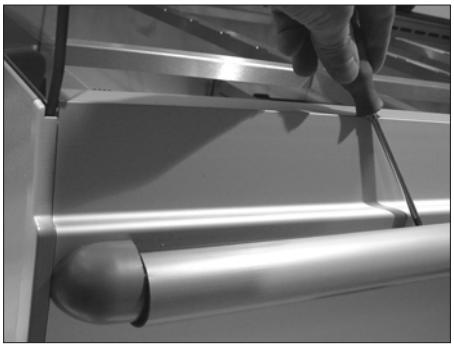

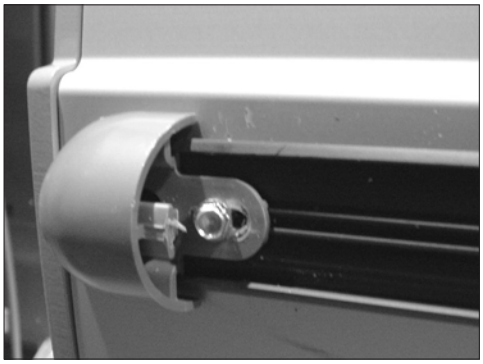

1. Remove the profile with a screw driver. Slide screw driver along the length of the profile to remove the profile.
2. Install the new bumper.

Note: To prevent scratching a piece of cloth could be placed between the metal of the profile and the screwdriver.

SIDE PLATE LEFT AND RIGHT, FRONT SIDE CURVED MODEL

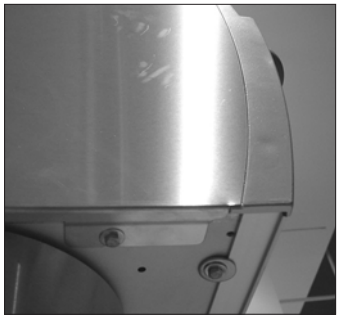

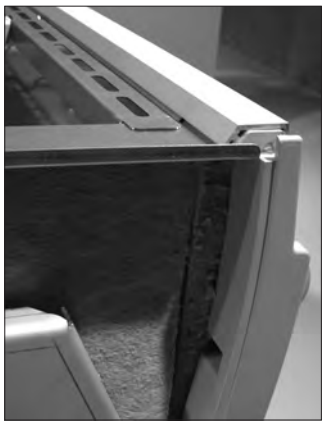

1. Remove the side glass.
2. Loosen the bolts on the bottom side that secure the side plate and remove this plate.
3. Loosen the bolts and rivets on the front bottom side that secure the aluminium front and remove this front.
4. Remove the side plate.
5. Reverse the procedure to install.

Note: when replacing the front panel, also transfer the magnets and holders on the inside of the panel. These can be removed by pulling the middle outwards slightly and sliding them out.

EMPTY PAGE

ELECTRICAL TESTS AND SERVICE PROCEDURES

WARNING: Disconnect the electrical power to the machine at the main circuit box. Place a tag on the circuit box indicating the circuit is being serviced.

PTC 1000 SENSOR TEST

1. Remove the right, left and middle panel according to prior procedure.
2. Remove the wiring from the sensor.
3. Connect a temperature tester to the probe of the sensor for comparison.
4. Test the probe with an Ohmmeter.

Temperature		Resistance Ω
°F	°C	± 5 Ohms
-4	-20	951
14	-10	877
32	0	807
50	10	740
68	20	677
77	25	990

TEMPERATURE STANDARD COMPLIANCE

The cold deli merchandisers complies with the ISO 23953-2 standard, this standard specifies requirements for the construction, characteristics and performance of refrigerated display cabinets used in the sale and display of foodstuffs.

ADJUSTING JOHNSON MR4 THERMOSTAT

Changing set point

1. Press enter key for 2 seconds. In display the setpoint appears (32°F).
2. Change value with up or down key.
3. Press enter key to confirm.

Setting internal parameters

1. Press enter key for 7 seconds. In display the first parameter appears (HY).
2. Press enter key to read out value.
3. Change value with up or down key.
4. Press enter key to confirm.
5. The next parameter appears. Follow instructions 2 to 4.

When no key is pressed after last confirmation, system goes back to normal operation mode after 15 seconds.

Replacing of thermostat

When you install a new thermostat, then always change parameter Un first to 1 (°F). Otherwise some other parameters cannot be changed to the desired value. You can run through the parameters with the up or down keys, once you are inside the parameter settings.

Options

1. Self-test procedure. To execute this you first have to diconnect loads before self-test procedure. Press the up and down keys together, and hold for 5 seconds. Note: To return to normal mode the control must be switched OFF and ON again.
2. Manual start of defrost cycle. Hold the defrost key for 3 seconds. Note: The temperature has to be lower than the setting of parameter dt (41°F).
3. Actual temperature of sensor 1 (Thermostat). Press up key shortly 2 times.
4. Actual temperature of sensor 2 (Evaporator). Press down key shortly 2 times.

Error messages on display

F1: Interuption or short circuit of thermostat sensor.

F2: Interuption or short circuit of evaporator sensor.

EE: Programme failure.

JOHNSONS MR4 SETTINGS

Parameters Johnson thermostat

Parameter	Description		CD 2-3-4-5 UL	Standard value from supplier
	Setpoint	°F	32	0
HY	Hysteresis	°F	4	2
LL	Lower sepoint limit	°F	27	0
hL	Higher setpoint limit	°F	40	30
cc	Anti short cycling	min	3	2
co	Deep freezing time	min	30	60
Ah	High temperature alarm	°F	10	10
AL	Low temperature alarm	°F	-10	-10
Ad	Alarm differential	K	5	1
At	Alarm time delay	min	30	30
dF	Defrost function		0	0
dE	Defrost end function		1	1
dt	Defrost termination temp.	°F	41	7
di	Defrost interval time	hrs	4	6
dd	Max defrost duration	min	45	40
dc	Dripping time	min	0	5
du	First defrost after power on	min	off	10
dP	Display during defrost		0	0
dr	Delayed displayed temp. after defrost		15	20
iF	Digital input function		0	0
id	Digital input time delay	min	0	5
FF	Fan operating function		0	0
Fd	Fan start up delay after defrost end	min	5	5
Fr	Fan start temp. after defrost end	°F	0	-5
SF	Thermostat operating function in case of sensor failure		2	2
So	Offset temp. sensor	K	0	0
Un	Temperature units °C/°F	0/1	1	0
Pu	Display updating time delay	sec	1	1

ADJUSTING FK400T THERMOSTAT (EVAPORATOR TRAY)

Changing set point

1. Press the set button. The set temperature will be shown.
2. Within 2 seconds change value with arrow up or arrow down button.
3. Press the set button to confirm.

Setting internal parameters

1. Press the arrow up and down button simultaneously for 4 seconds. In display the first parameter appears (PA).
2. Press the set button. The value 0 will be shown.
3. Within 2 seconds press the down button to select the value on -19.
4. Press the set button to confirm.
5. Press the arrow up and down button simultaneously for 4 seconds. In display the first deeper parameter appears (⌐0).
6. Press the arrow up button for the next parameter (⌐8).
7. Press the set button to read out the value.
8. Within 2 seconds press the arrow up or down button to change value.
9. Press the set button to confirm.
10. Press the arrow up for the next parameter. Follow instructions 6 to 8.
    When no key is pressed after last confirmation, system goes back to normal operation mode after 60 seconds.

Replacing of thermostat

When you install a new thermostat, then always change parameter ⌐8 first to 0 (°F). Otherwise some other parameters cannot be changed to the desired value. You can run through the parameters with the up or down keys, once you are inside the parameter settings.

Error codes on display

E2: Corrupted memory data. Reset by switching off the power. If error is still there than change the thermostat.

E0: Sensor reading too high. Test integitry of the probe.

FK400T THERMOSTAT SETTINGS

Parameters FK400T thermostat evaporator tray

			CD 2-3-4-5
	Setpoint	°F	284
⅃8	Temperature unit (°C / °F = 1 / 0)	°F	0
rA0	Hysteresis	°F	-45
rA1	Lower setpoint limit	°F	150
rA2	Higher setpoint limit	°F	392

The parameters above have to be adjusted when changing the thermostat for the evaporator tray.

CONTROL LOCATION FULL SERVE MAIN THERMOSTAT

1. Lighting switch.
2. Cooling switch.

Defrost key. For manual defrosting.
LED 1 on. Cooling machine activated.
LED 2 on. Defrosting activated.
Enter key. For temperature or parameter adjustment.
Arrow up/down keys. For value adjustment.

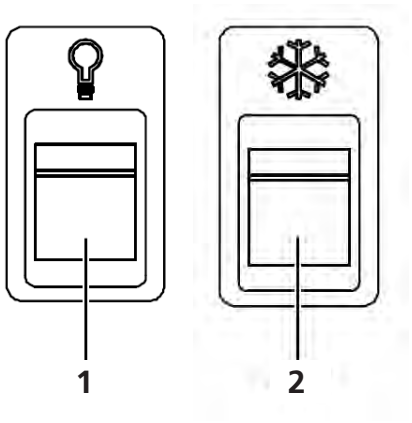

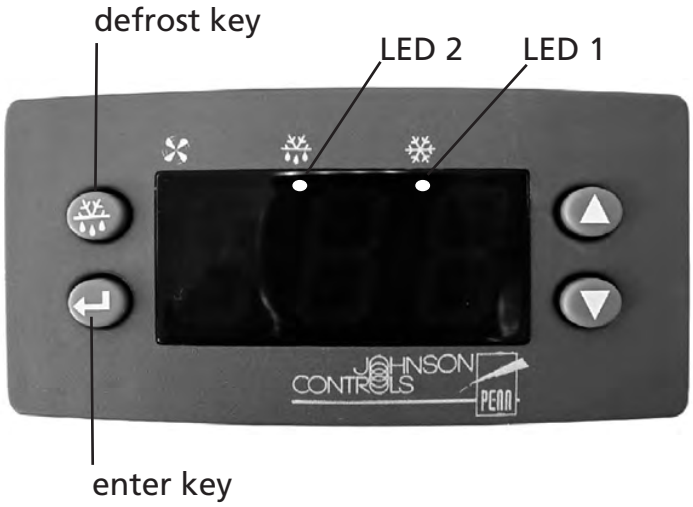

Johnson MR4 thermostat

CONTROL LOCATION FULL SERVE THERMOSTAT EVAPORATOR TRAY

Out LED on. Heating activated.
°F LED on. Values on °F.
°C LED on. Values on °C.
Set key. For temperature or parameter adjustment.
Arrow up/down keys. For value adjustment.

FK400T thermostat evaporator tray

TROUBLESHOOTING

COLD DELI 2/3/4/5 FULL SERVE

Symptom	Possible causes
No power to controls.	1. Main breaker open. 2. Wiring loose. 3. Tumble switch malfunction.
No indication on electronic thermostat, but lighting functions.	1. Electronic thermostat defective 2. Wiring loose
Display does not reach set temperature.	1. Incorrect line voltage. 2. PTC-1000 temperature sensor malfunction. 3. Cooling system inoperative or defective. 4. Contactor inoperative. 5. Defrosting sensor malfunction. 6. Incorrectly programmed thermostat. 7. One or more blowers defective. 8. Unit is positioned in direct sunlight or near a heat source. 9. Product is stacked too high. 10. Unit is wrongfully installed and cannot dispose of heat
Cooling system does not initiate (compressor does not run).	1. PTC-1000 temperature sensor malfunction. 2. Compressor defective or parts associated with it. 3. Contactor inoperative. 4. Incorrectly programmed thermostat. 5. Defrosting sensor malfunction. 6. Wiring loose.
Evaporation drip tray overflowing	1. Heater(s) inoperative or defective. 2. Thermostat malfunction. 3. Wiring loose. 4. Relative humidity of the surrounding area too high.
Water does not drain.	1. Clogged drain pipe and or tube.
No lighting.	1. Incorrect line voltage. 2. Electrical ballast defective. 3. Wiring loose. 4. Light bulb defective. 5. Tumble switch malfunction.
No air circulation within the merchandiser.	1. Obstruction of one or more of the ventilation openings in the front or rear. 2. One or more blowers inoperative or defective. 3. Wiring loose. 4. Evaporator frosted or clogged with dirt.
Error F1 on display MR4 thermostat.	1. Interuption or short circuit of thermostat sensor.
Error F2 on display MR4 thermostat.	1. Interuption or short circuit of evaporator sensor.
Error EE on display MR4 thermostat.	1. Programme failure. Check parameters.

EXPLODED VIEWS & PARTLISTS

COLD DELI 2 ASSEMBLY DRAWING

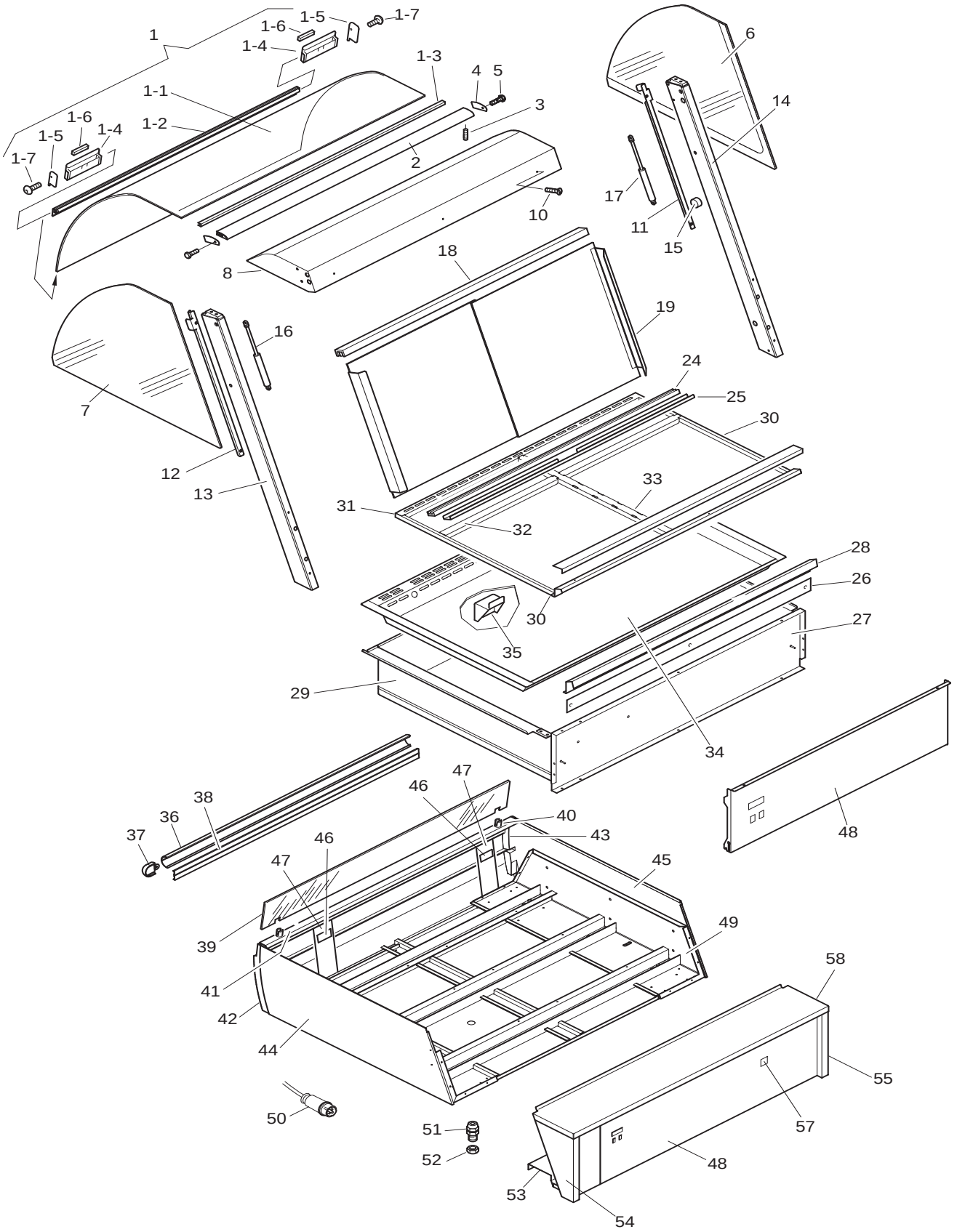

Item	Part nr.	Qty	Descirption
1	**9260237S**	1	Glass, bended, complete with profiles
1-1	.....	1	Glass, bended, without profiles
1-2	9263070	1	Glass handle
1-3	9261024	0.8 mtr.	Protection profile (plastic)
1-4	9264595	2	Magnet holder
1-5	9264596	2	Cover plate
1-6	9191182	2	Magnet block
1-7	4288324	2	Screw M 4x8, SS socket button head
2	9263071	1	Mounting profile, glass
3	9261027		Socket set screw M6x8, Torx, stainless steel
4	9262034	2	Cover plate
5	4288324	2	Screw M 4x8, SS socket button head
6	9262022	1	Sideglass right
7	9262023	1	Sideglass left
8	9266096	1	Light fixture
10	4288322	8	Screw M5 x 10, SS socket button head
11	9264062	1	Profile, sideglass right
12	9264063	1	Profile, sideglass left
13	9262005	1	Console left, ass.
14	9262004	1	Console right, ass.
15	9241000	1	Bumper, console (20 pieces)
16	8031843	1	Gas spring 500 N
17	9261020	1	Gas spring 100 N
18	9262316	1	Profile, sliding door, top
19	**9262307S**	2	Sliding door assembly
24	9262315	1	Profile, sliding door, bottom
25	9266081	1	Holder, sliding door profile
26	9265118	1	Air outlet
27	9266085	1	Cover plate, Insulation backside
28	9266087	1	Exhaust profil
29	9260431	1	Inner housing
30	9264374	2	Lateral profile
31	9266091	1	Suction profile
32	9264025	2	Pan support, short
33	9260425	1	Pan support, long
34	9266088	1	Plateau
35	9264371	1	Bracket, suction grid
36	9263068	1	Bumper (plastic)
37	8071036	2	Plug, end
38	9263069	1	Mounting profile
39	9262456	1	Front window, perspex
40	9263030	2	Glass Holder
41	9263064	1	Front, aluminium
42	9264112	1	End cap, left front
43	9264111	1	End cap, right front

Item	Part nr.	Qty	Descirption
44	9265017	1	Side panel, left
45	9265018	1	Side panel, right
46	9191182	2	Magnet block
47	9264594	2	Magnet holder, front
48	9260246	1	Operation panel
49	9264000	2	Side panel, frame
50	9172412	1	Connecting cable with plug 5-20P
51	9222076	1	Strain relief M20
52	9222077	1	Nut, relief strain M20
53	9266092	1	Cover profile, inner frame
54	9264084	1	Side plate, left
55	9264083	1	Side plate, right
57	8072098	1	Indication plate
58	9266075	1	Work plateau, service side

COLD DELI 2 COMPONENTS DRAWING

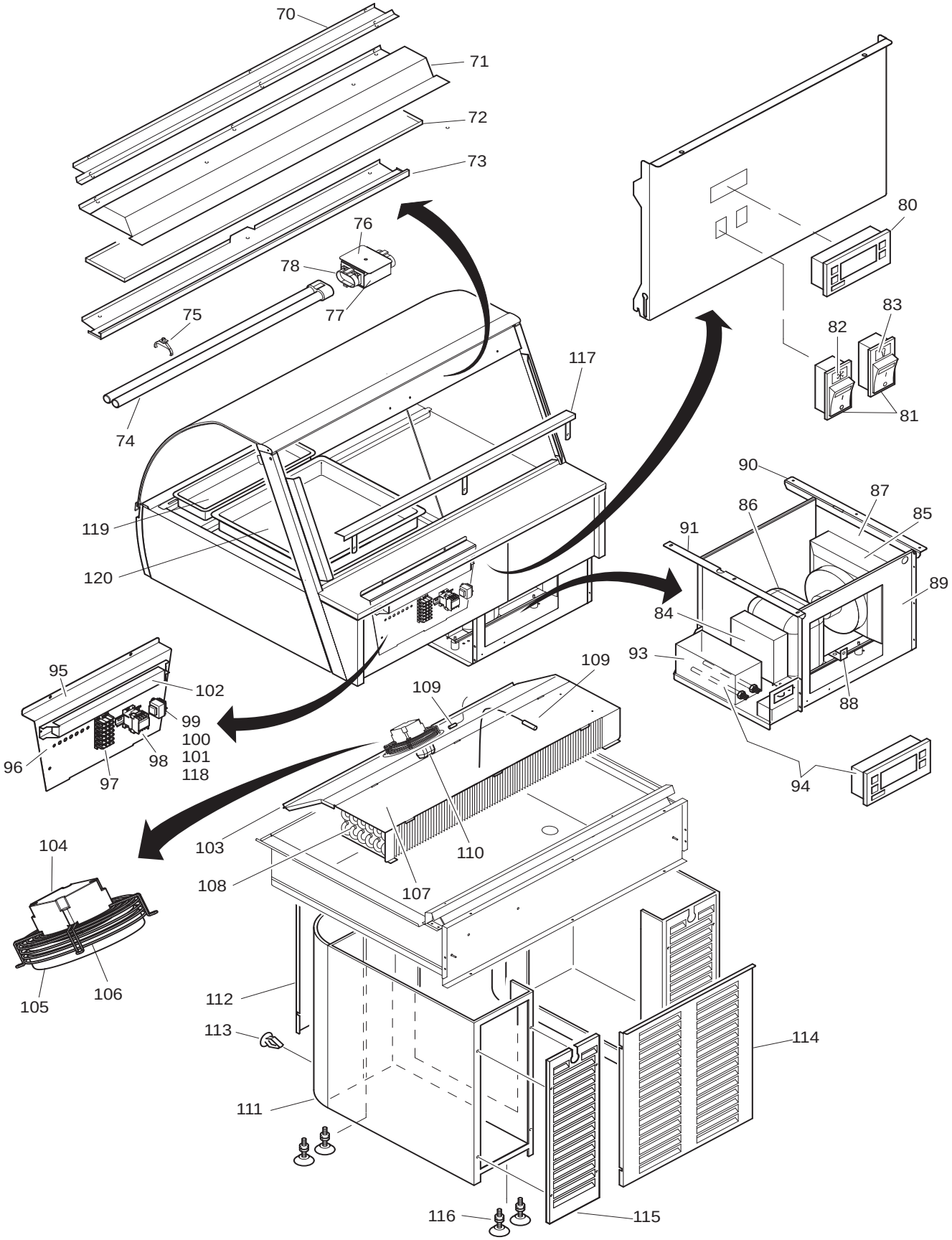

Item	Part nr.	Qty	Descirption
70	9266093	1	Locking, glas plate
71	9266095	1	Reflector
72	9262311	1	Glass, illumination
73	9266094	1	Mounting profile, glass strip
74	9160019	1	Lamp, PLL 55 W
75	9222210	1	Lamp support
76	9264552	1	Bracket, lamp base
77	9264554	1	Cover, lamp base
78	9082897	2	Lamp holder
80	**9222075S**	1	Thermostat
81	9181008	2	Switch, tumble
82	9261005	1	Sticker, cooling
83	9181071	1	Sticker, lighting
84	9261055	1	Cooling compressor
85	**9261057S**	1	Condensor with blower
86	4500214	1	Pressure switch
87	9266229	1	Cover plate, condensor
88	9284544	1	Fastening bracket
89	9266178	1	Frame, cooling unit
90	9264602	1	Fastening frame
91	9264605	1	Fastening frame, left
93	9264755	1	Evaporator tray
94	**9222206S**	1	Elements and thermostat ass.
95	9264600	1	Mounting plate, electrical compo-nents
96	2005501	1	Ground rail
97	9151010	1	Connecting block
98	9221054	1	Contactor
99	9181036	1	Transformer 115/12 V
100	9191218	1	Fuse holder
101	9261169	1	Fuse 2,5 A

Item	Part nr.	Qty	Descirption
102	9222065	1	Ballast, 55W
103	9266090	1	Fan plate
104	9222207	1	Blower motor
105	8071028	1	Fan blade
106	8071070	1	Fan cover
107	9266089	1	Evaporator plate
108	9262310	1	Evaporator
109	9221011	2	Temperature sensor
110	8072070	1	Connecting block
111	9264405	2	Round cap
112	9264679	1	Front panel
113	4313049	8	Fastening clip
114	9264680	1	Panel, operator side
115	9264760	2	Hatch with louvres
116	9261012	8	Adjustable leg
117	9265117	1	Crumble profile
118	9191250	1	End cap, fuse holder
119	2104220	2	Gastronorm tray 1/3
120	2104089	2	Gastronorm tray 1/1

COLD DELI 3-4-5 ASSEMBLY DRAWING

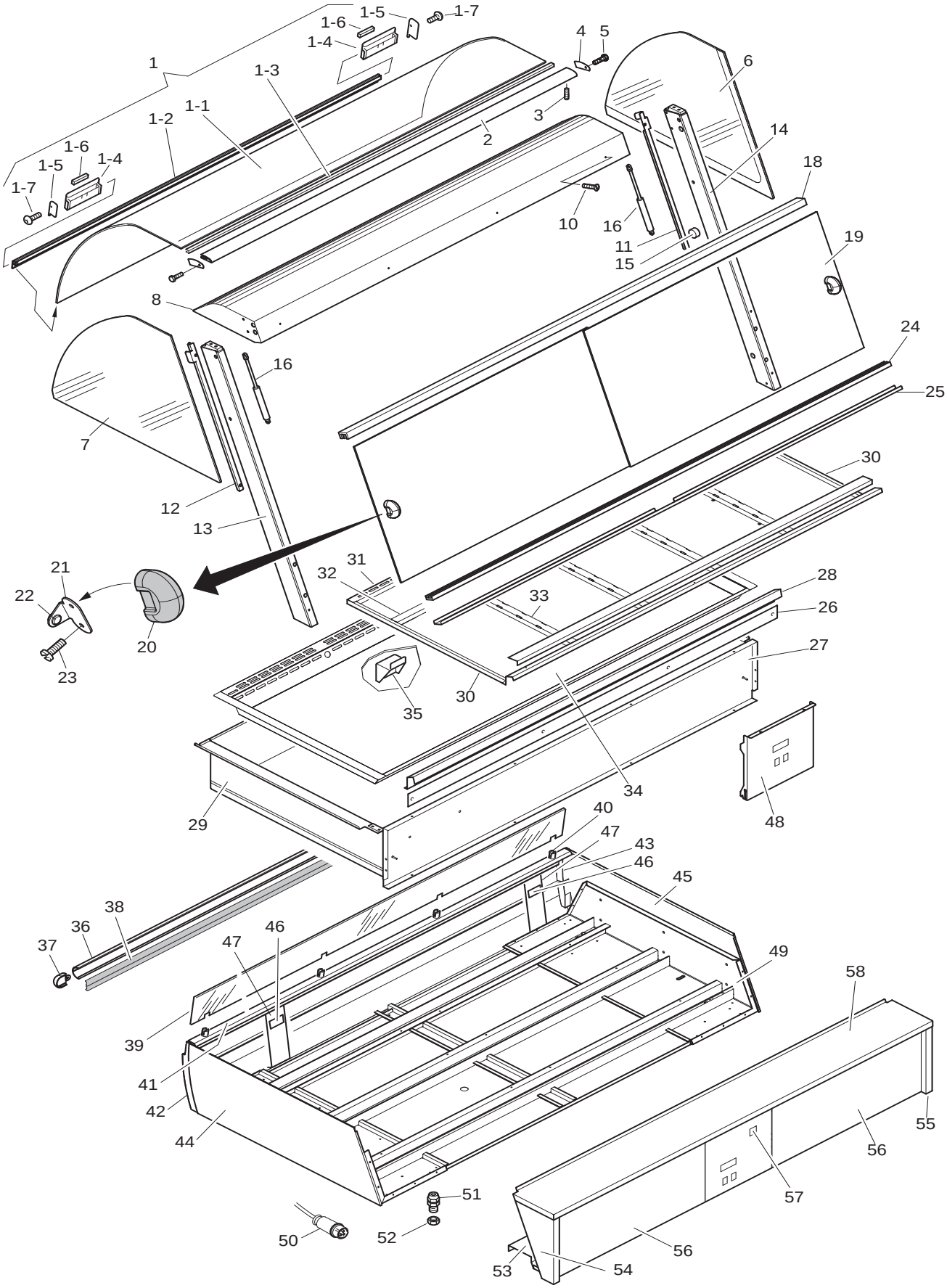

Item	Part nr.	Model	Qty	Descirption
1	**9260230S**	CD 3	1	Glass, bended, complete with profiles
1	**9260231S**	CD 4	1	Glass, bended, complete with profiles
1	**9260232S**	CD 5	1	Glass, bended, complete with profiles
1-1	.....	CD 3	1	Glass, bended, without profiles
1-1	.....	CD 4	1	Glass, bended, without profiles
1-1	.....	CD 5	1	Glass, bended, without profiles
1-2	9263011	CD 3	1	Glass handle
1-2	9263006	CD 4	1	Glass handle
1-2	9263002	CD 5	1	Glass handle
1-3	9261024	CD 3	1.1 mtr.	Protection profile (plastic)
1-3	9261024	CD 4	1.5 mtr.	Protection profile (plastic)
1-3	9261024	CD 5	1.8 mtr.	Protection profile (plastic)
1-4	9264595	All models	2	Magnet holder
1-5	9264596	All models	2	Cover plate
1-6	9191182	All models	2	Magnet block
1-7	4288324	All models	2	Screw M 4x8, SS socket button head
2	9263010	CD 3	1	Mounting profile, glass
2	9263005	CD 4	1	Mounting profile, glass
2	9263001	CD 5	1	Mounting profile, glass
3	9261027	All models		Socket set screw M6x8, Torx, stainless steel
4	9262034	All models	2	Cover plate
5	4288324	All models	2	Screw M 4x8, SS socket button head
6	9262022	All models	1	Sideglass right
7	9262023	All models	1	Sideglass left
8	9265016	CD 3	1	Light fixture
8	9264563	CD 4	1	Light fixture
8	9264555	CD 5	1	Light fixture
10	4288322	All models	8	Screw M5 x 10, SS socket button head
11	9264062	All models	1	Profile, sideglass right
12	9264063	All models	1	Profile, sideglass left
13	9262005	All models	1	Console left, ass.
14	9262004	All models	1	Console right, ass.
15	9241000	All models	1	Bumper, console (20 pieces)
16	8031843	CD 3	2	Gas spring 500 N
16	9261021	CD 4	2	Gas spring 700 N
16	8031819	CD 5	2	Gas spring 850 N
18	9262032	CD 3	1	Profile, sliding door, top
18	9262030	CD 4	1	Profile, sliding door, top
18	9262028	CD 5	1	Profile, sliding door, top

Item	Part nr.	Model	Qty	Descirption
19	9262026	CD 3	2	Glass, sliding door
19	9262025	CD 4	2	Glass, sliding door
19	9262024	CD 5	2	Glass, sliding door
20	8065038	All models	2	Door handle
21	9184253	All models	2	Bumper profile
22	9086207	All models	2	Bumper
23	0147674	All models	4	Screw M 4x25, SS cross recess head (philips)
24	9262033	CD 3	1	Profile, sliding door, bottom
24	9262031	CD 4	1	Profile, sliding door, bottom
24	9262029	CD 5	1	Profile, sliding door, bottom
25	9264070	CD 3	1	Holder, sliding door profile
25	9264065	CD 4	1	Holder, sliding door profile
25	9264056	CD 5	1	Holder, sliding door profile
26	9265120	CD 3	1	Air outlet
26	9265122	CD 4	1	Air outlet
26	9265124	CD 5	1	Air outlet
27	9264532	CD 3	1	Cover plate, Insulation backside
27	9264522	CD 4	1	Cover plate, Insulation backside
27	9264506	CD 5	1	Cover plate, Insulation backside
28	9264533	CD 3	1	Exhaust profil
28	9264523	CD 4	1	Exhaust profil
28	9264507	CD 5	1	Exhaust profil
29	9260500	CD 3	1	Inner housing
29	9260505	CD 4	1	Inner housing
29	9260510	CD 5	1	Inner housing
30	9264383	All models	2	Lateral profile
31	9264370	CD 3	1	Suction profile
31	9264376	CD 4	1	Suction profile
31	9264377	CD 5	1	Suction profile
32	9264025	CD 3	3	Pan support, short
32	9264025	CD 4	4	Pan support, short
32	9264025	CD 5	5	Pan support, short
33	9260425	CD 3	2	Pan support, long
33	9260425	CD 4	3	Pan support, long
33	9260425	CD 5	4	Pan support, long
34	9264220	CD 3	1	Plateau
34	9264210	CD 4	1	Plateau
34	9264201	CD 5	1	Plateau
35	9264371	All models	1	Bracket, suction grid
36	9263040	CD 3	1	Bumper (plastic)
36	9263041	CD 4	1	Bumper (plastic))
36	9263042	CD 5	1	Bumper (plastic)

Item	Part nr.	Model	Qty	Descirption
37	8071036	All models	2	Plug, end
38	9263045	CD 3	1	Mounting profile
38	9263046	CD 4	1	Mounting profile
38	9263047	CD 5	1	Mounting profile
39	9262452	CD 3	1	Front window, perspex
39	9262453	CD 4	1	Front window, perspex
39	9262454	CD 5	1	Front window, perspex
40	9263030	CD 3	3	Glass Holder
40	9263030	CD 4	4	Glass Holder
40	9263030	CD 5	4	Glass Holder
41	9263013	CD 3	1	Front, aluminium
41	9263008	CD 4	1	Front, aluminium
41	9263004	CD 5	1	Front, aluminium
42	9264112	All models	1	End cap, left front
43	9264111	All models	1	End cap, right front
44	9265017	All models	1	Side panel, left
45	9265018	All models	1	Side panel, right
46	9191182	All models	2	Magnet block
47	9264594	All models	2	Magnet holder, front
48	9264208	All models	1	Operation panel
49	9264000	All models	2	Side panel, frame
50	9172412	All models	1	Connecting cable with plug 5-20P
51	9222076	All models	1	Strain relief M20
52	9222077	All models	1	Nut, relief strain M20
53	9264621	CD 3	1	Cover profile, inner frame
53	9264616	CD 4	1	Cover profile, inner frame
53	9264611	CD 5	1	Cover profile, inner frame
54	9264084	All models	1	Side plate, left
55	9264083	All models	1	Side plate, right
56	9260240	CD 3	2	Back panel
56	9260242	CD 4	2	Back panel
56	9260244	CD 5	2	Back panel
57	8072098	All models	1	Indication plate
58	9264091	CD 3	1	Work plateau, service side
58	9264086	CD 4		Work plateau, service side
58	9264076	CD 5		Work plateau, service side

COLD DELI 3-4-5 COMPONENTS DRAWING

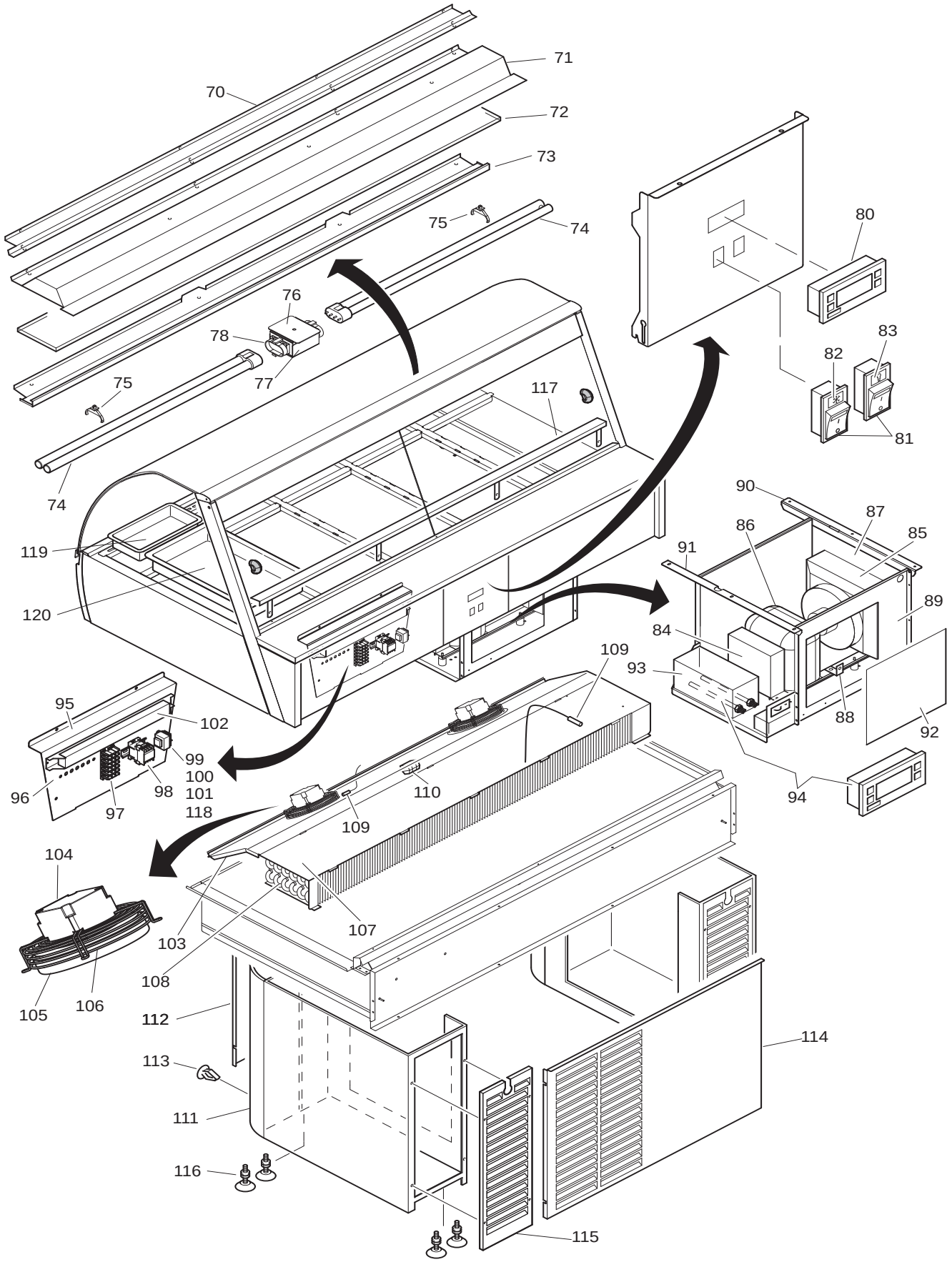

Item	Part nr.	Model	Qty	Descirption
70	9264573	CD 3	1	Locking, glas plate
70	9264564	CD 4	1	Locking, glas plate
70	9264556	CD 5	1	Locking, glas plate
71	9264570	CD 3	1	Reflector
71	9264560	CD 4	1	Reflector
71	9264550	CD 5	1	Reflector
72	9262095	CD 3	1	Glass, illumination
72	9262096	CD 4	1	Glass, illumination
72	9262097	CD 5	1	Glass, illumination
73	9264571	CD 3	1	Mounting profile, glass strip
73	9264561	CD 4	1	Mounting profile, glass strip
73	9264551	CD 5	1	Mounting profile, glass strip
74	9221006	CD 3	2	Lamp, PLL 36 W
74	9160019	CD 4	2	Lamp, PLL 55 W
74	9160019	CD 5	2	Lamp, PLL 55 W
75	9222210	All models	2	Lamp support
76	9264552	All models	1	Bracket, lamp base
77	9264554	All models	1	Cover, lamp base
78	9082897	All models	2	Lamp holder
80	**9222075S**	All models	1	Thermostat
81	9181008	All models	2	Switch, tumble
82	9261005	All models	1	Sticker, cooling
83	9181071	All models	1	Sticker, lighting
84	9261055	CD 3	1	Cooling compressor
84	9261051	CD 4	1	Cooling compressor
84	9261051	CD 5	1	Cooling compressor
85	**9261057S**	CD 3	1	Condensor with blower
85	**9261052S**	CD 4	1	Condensor with blower
85	**9261052S**	CD 5	1	Condensor with blower
86	4500214	All models	1	Pressure switch
87	9266229	CD 3	1	Cover plate, condensor
87	9264754	CD 4	1	Cover plate, condensor
87	9264754	CD 5	1	Cover plate, condensor
88	9284544	All models	1	Fastening bracket
89	9264308	All models	1	Frame, cooling unit
90	9264602	All models	1	Fastening frame
91	9264605	All models	1	Fastening frame, left
92	9264753	All models	1	Cover plate
93	9264755	All models	1	Evaporator tray
94	**9222206S**	All models	1	Elements and thermostat ass.
95	9264600	All models	1	Mounting plate, electri-cal components
96	2005501	All models	1	Ground rail
97	9151010	All models	1	Connecting block
98	9221054	All models	1	Contactor

Item	Part nr.	Model	Qty	Descirption
99	9181036	All models	1	Transformer 115/12 V
100	9191218	All models	1	Fuse holder
101	9261169	All models	1	Fuse 2,5 A
102	9222065	CD 3	1	Ballast, 55W
102	9181009	CD 4	1	Ballast, 2x 55 W
102	9181009	CD 5	1	Ballast, 2x 55 W
103	9264536	CD 3	1	Fan plate
103	9264527	CD 4	1	Fan plate
103	9264511	CD 5	1	Fan plate
104	9222207	CD 3	1	Blower motor
104	9222207	CD 4	2	Blower motor
104	9222207	CD 5	2	Blower motor
105	8071028	CD 3	1	Fan blade
105	8071028	CD 4	2	Fan blade
105	8071028	CD 5	2	Fan blade
106	8071070	CD 3	1	Fan cover
106	8071070	CD 4	2	Fan cover
106	8071070	CD 5	2	Fan cover
107	9264535	CD 3	1	Evaporator plate
107	9264525	CD 4	1	Evaporator plate
107	9264509	CD 5	1	Evaporator plate
108	9262201	CD 3	1	Evaporator
108	9262202	CD 4	1	Evaporator
108	9262203	CD 5	1	Evaporator
109	9221011	All models	2	Temperature sensor
110	8072070	All models	1	Connecting block
111	9264405	All models	2	Round cap
112	9264420	CD 3	1	Front panel
112	9264428	CD 4	1	Front panel
112	9264438	CD 5	1	Front panel
113	4313049	All models	8	Fastening clip
114	9264763	CD 3	1	Panel, operator side
114	9264762	CD 4	1	Panel, operator side
114	9264761	CD 5	1	Panel, operator side
115	9264760	All models	2	Hatch with louvres
116	9261012	All models	8	Adjustable leg
117	9265119	CD 3	1	Crumble profile
117	9265121	CD 4	1	Crumble profile
117	9265123	CD 5	1	Crumble profile
118	9191250	All models	1	End cap, fuse holder
119	2104220	CD 3	3	Gastronorm tray 1/3
119	2104220	CD 4	4	Gastronorm tray 1/3
119	2104220	CD 5	5	Gastronorm tray 1/3
120	2104089	CD 3	3	Gastronorm tray 1/3
120	2104089	CD 4	4	Gastronorm tray 1/3
120	2104089	CD 5	5	Gastronorm tray 1/3

COLD DELI 2 SQUARE ASSEMBLY DRAWING

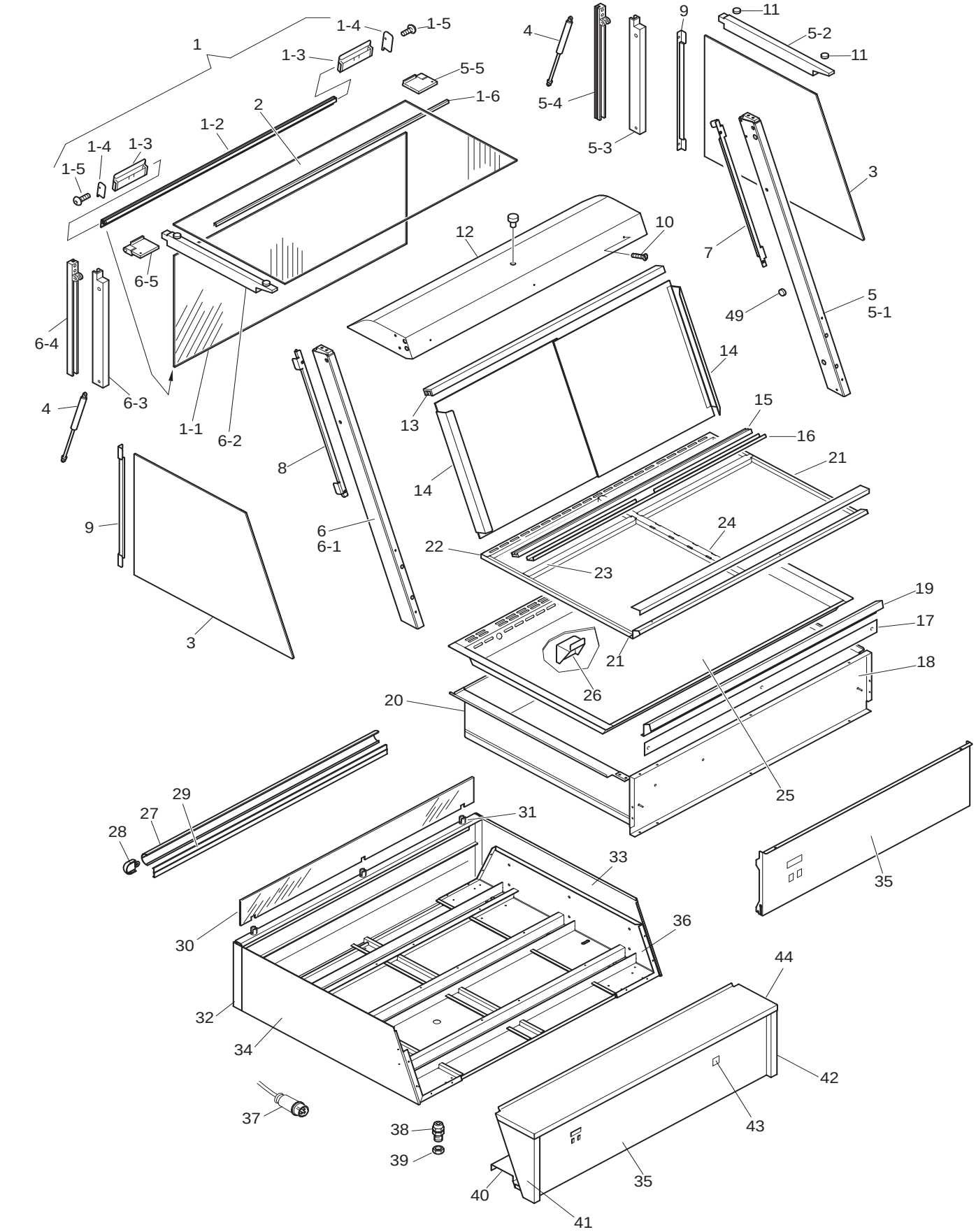

Item	Part nr.	Qty	Descirption
1	**9262149S**	1	Glass, front, complete with profiles
1-1	.....	1	Glass, front, without profiles
1-2	9263070	1	Glass handle
1-3	9264595	2	Magnet holder
1-4	9264596	2	Cover plate
1-5	4288324	2	Screw M 4x8, SS socket button head
1-6	9261024	0.8 mtr.	Protection profile (plastic)
2	9262148	1	Glass, top side
3	**9262152S**	2	Side glass
4	9262160	2	Gas spring 200 N
5	9262304	1	Console, right, ass.
5-6	**9268365**	**set**	**Various fastening materials for consoles**
6	9262305	1	Console, left, ass.
6-6	**9268365**	**set**	**Various fastening materials for consoles**
7	9265105	1	Holder, sideglass, back right
8	9265104	1	Holder, sideglass, back left
9	9265111	2	Holder, sideglass front
10	4288322	8	Screw M5 x 10, SS socket button head
11	9261056	4	Protection cap
12	9266096	1	Light fixture
13	9262316	1	Profile, sliding door, top
14	**9262307S**	2	Sliding door, ass.
15	9262315	1	Profile, sliding door, bottom
16	9266081	1	Holder, sliding door profile
17	9265118	1	Air outlet
18	9266085	1	Cover plate, Insulation backside
19	9266087	1	Exhaust profil
20	9260431	1	Inner housing
21	9264374	2	Lateral profile
22	9266091	1	Suction profile
23	9264025	2	Pan support, short
24	9260425	1	Pan support, long
25	9266088	1	Plateau
26	9264371	1	Support, tray frame
27	9263068	1	Bumper (plastic)
28	8071036	2	Plug, end
29	9263069	1	Mounting profile
30	9262456	1	Front window, perspex
31	9262076	2	Glass Holder
32	9266099	1	Front panel
33	9265103	1	Side panel, left
34	9265102	1	Side panel, right
35	9260246	1	Operation panel
36	9264000	2	Side panel, frame
37	9172412	1	Connecting cable with plug 5-20P

Item	Part nr.	Qty	Descirption
38	9222076	1	Strain relief M20
39	9222077	1	Nut, relief strain M20
40	9266092	1	Cover profile, inner frame
41	9264084	1	Side plate, left
42	9264083	1	Side plate, right
43	8072098	1	Indication plate
44	9266075	1	Work plateau, service side

COLD DELI 2 SQUARE COMPONENTS DRAWING

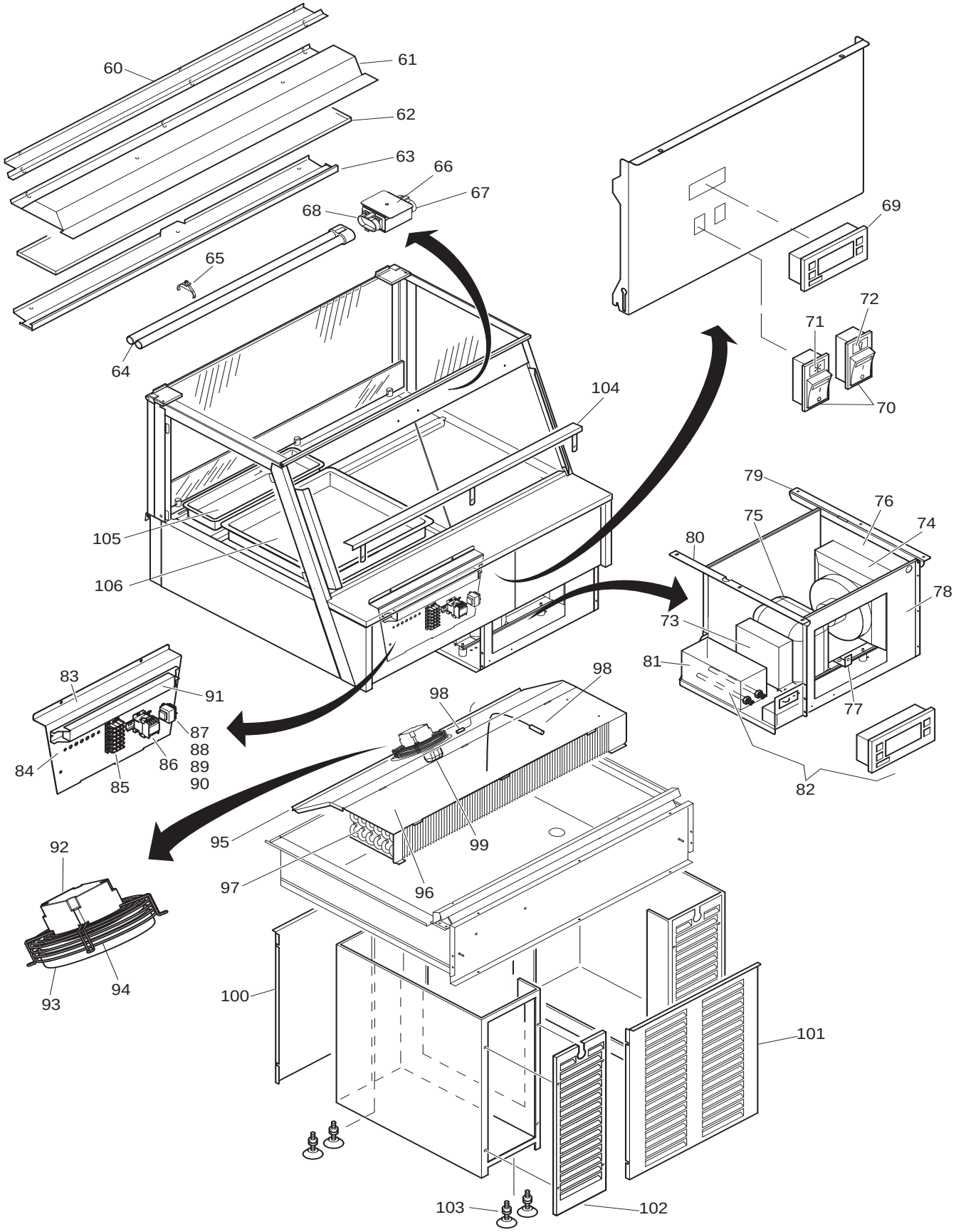

D-0201-02

Item	Part nr.	Qty	Descirption
60	9266093	1	Locking, glas plate
61	9266095	1	Reflector
62	9262311	1	Glass, illumination
63	9266094	1	Mounting profile, glass strip
64	9160019	1	Lamp, PLL 55 W
65	9222210	1	Lamp support
66	9264552	1	Bracket, lamp base
67	9264554	1	Cover, lamp base
68	9082897	2	Lamp holder
69	**9222075S**	1	Thermostat
70	9181008	2	Switch, tumble
71	9261005	1	Sticker, cooling
72	9181071	1	Sticker, lighting
73	9261055	1	Cooling compressor
74	**9261057S**	1	Condensor with blower
75	4500214	1	Pressure switch
76	9266229	1	Cover plate, condensor
77	9284544	1	Fastening bracket
78	9266178	1	Frame, cooling unit
79	9264602	1	Fastening frame
80	9264605	1	Fastening frame, left
81	9264755	1	Evaporator tray
82	**9222206S**	1	Elements and thermostat ass.
83	9264600	1	Mounting plate, electrical compo-nents
84	2005501	1	Ground rail
85	9151010	1	Connecting block
86	9221054	1	Contactor
87	9181036	1	Transformer 115/12 V
88	9191218	1	Fuse holder
89	9261169	1	Fuse 2,5 A
90	9191250	1	End cap, fuse holder
91	9222065	1	Ballast, 55W

Item	Part nr.	Qty	Descirption
92	9222207	1	Blower motor
93	8071028	1	Fan blade
94	8071070	1	Fan cover
95	9266090	1	Fan plate
96	9266089	1	Evaporator plate
97	9262310	1	Evaporator
98	9221011	2	Temperature sensor
99	8072070	1	Connecting block
100	9264681	1	Front panel
101	9264680	1	Panel, operator side
102	9264760	2	Hatch with louvres
103	9261012	8	Adjustable leg
104	9265117	1	Crumble profile
105	2104220	2	Gastronorm tray 1/3
106	2104089	2	Gastronorm tray 1/1

COLD DELI 3-4-5 SQUARE ASSEMBLY DRAWING

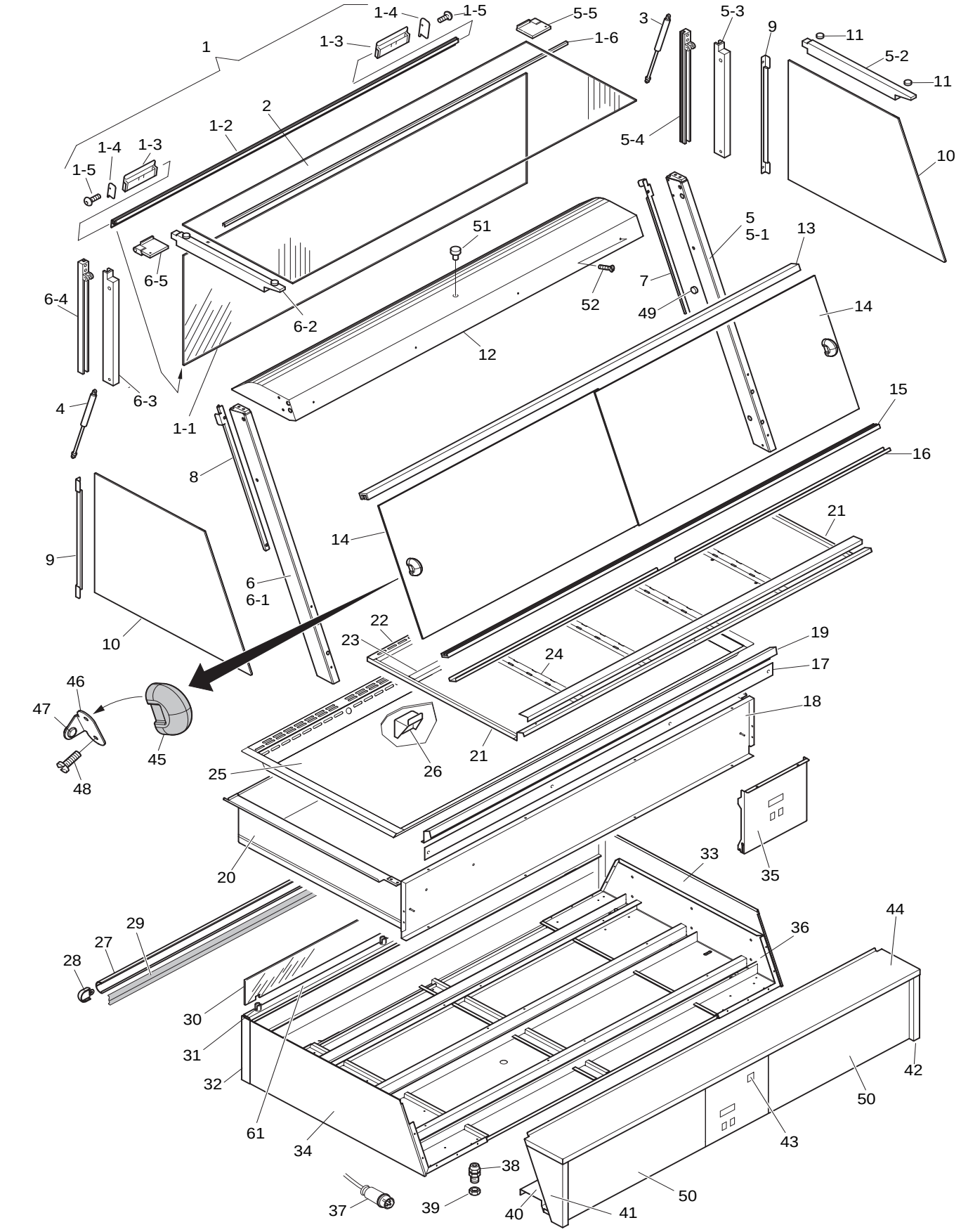

Item	Part nr.	Model	Qty	Descirption
1	**9262151S**	CD 3	1	Glass, front, complete with profiles
1	**9262154S**	CD 4	1	Glass, front, complete with profiles
1	**9262156S**	CD 5	1	Glass, front, complete with profiles
1-1	.....	CD 3	1	Glass, front, without profiles
1-1	.....	CD 4	1	Glass, front, without profiles
1-1	.....	CD 5	1	Glass, front, without profiles
1-2	9263011	CD 3	1	Glass handle
1-2	9263006	CD 4	1	Glass handle
1-2	9263002	CD 5	1	Glass handle
1-3	9264595	All models	2	Magnet holder
1-4	9264596	All models	2	Cover plate
1-5	4288324	All models	2	Screw M 4x8, SS socket button head
1-6	9261024	CD 3	1.1 mtr.	Protection profile (plastic)
1-6	9261024	CD 4	1.5 mtr.	Protection profile (plastic)
1-6	9261024	CD 5	1.8 mtr.	Protection profile (plastic)
2	9262150	CD 3	1	Glass, top side
2	9262153	CD 4	1	Glass, top side
2	9262157	CD 5	1	Glass, top side
3	9262161	CD 3	1	Gas spring 300 N
3	9262161	CD 4	1	Gas spring 300 N
3	9262162	CD 5	1	Gas spring 400 N
4	9262161	CD 3	1	Gas spring 300 N
4	9262162	CD 4	1	Gas spring 400 N
4	9262162	CD 5	1	Gas spring 400 N
5	9262304	All models	1	Console right, ass.
5-6	**9268365**	**All models**	**set**	**Various fastening materials for consoles**
6	9262305	All models	1	Console left, ass.
6-6	**9268365**	**All models**	**set**	**Various fastening materials for consoles**
7	9265105	All models	1	Holder, sideglass right
8	9265104	All models	1	Holder, sideglass left
9	9265111	All models	2	Holder, sideglass front
10	**9262152S**	All models	2	Side glass
11	9261056	All models	4	Protection cap
12	9265016	CD 3	1	Light fixture
12	9264563	CD 4	1	Light fixture
12	9264555	CD 5	1	Light fixture
13	9262032	CD 3	1	Profile, sliding door, top
13	9262030	CD 4	1	Profile, sliding door, top
13	9262028	CD 5	1	Profile, sliding door, top

Item	Part nr.	Model	Qty	Descirption
14	9262026	CD 3	2	Glass, sliding door
14	9262025	CD 4	2	Glass, sliding door
14	9262024	CD 5	2	Glass, sliding door
15	9262033	CD 3	1	Profile, sliding door, bottom
15	9262031	CD 4	1	Profile, sliding door, bottom
15	9262029	CD 5	1	Profile, sliding door, bottom
16	9264070	CD 3	1	Holder, sliding door profile
16	9264065	CD 4	1	Holder, sliding door profile
16	9264056	CD 5	1	Holder, sliding door profile
17	9265120	CD 3	1	Air outlet
17	9265122	CD 4	1	Air outlet
17	9265124	CD 5	1	Air outlet
18	9264532	CD 3	1	Cover plate, Insulation backside
18	9264522	CD 4	1	Cover plate, Insulation backside
18	9264506	CD 5	1	Cover plate, Insulation backside
19	9264533	CD 3	1	Exhaust profil
19	9264523	CD 4	1	Exhaust profil
19	9264507	CD 5	1	Exhaust profil
20	9260500	CD 3	1	Inner housing
20	9260505	CD 4	1	Inner housing
20	9260510	CD 5	1	Inner housing
21	9264383	All models	2	Lateral profile
22	9264370	CD 3	1	Suction profile
22	9264376	CD 4	1	Suction profile
22	9264377	CD 5	1	Suction profile
23	9264025	CD 3	3	Pan support, short
23	9264025	CD 4	4	Pan support, short
23	9264025	CD 5	5	Pan support, short
24	9260425	CD 3	2	Pan support, long
24	9260425	CD 4	3	Pan support, long
24	9260425	CD 5	4	Pan support, long
25	9264220	CD 3	1	Plateau
25	9264210	CD 4	1	Plateau
25	9264201	CD 5	1	Plateau
26	9264371	All models	1	Bracket, suction grid
27	9263040	CD 3	1	Bumper (plastic)
27	9263041	CD 4	1	Bumper (plastic)
27	9263042	CD 5	1	Bumper (plastic)
28	8071036	All models	2	Plug, end
29	9263045	CD 3	1	Mounting profile
29	9263046	CD 4	1	Mounting profile
29	9263047	CD 5	1	Mounting profile

Item	Part nr.	Model	Qty	Descirption
30	9262452	CD 3	1	Front window, perspex
30	9262453	CD 4	1	Front window, perspex
30	9262454	CD 5	1	Front window, perspex
31	9262076	CD 3	3	Glass Holder
31	9262076	CD 4	4	Glass Holder
31	9262076	CD 5	4	Glass Holder
32	9265108	CD 3	1	Front panel
32	9265109	CD 4	1	Front panel
32	9265110	CD 5	1	Front panel
33	9265103	All models	1	Side panel, right
34	9265102	All models	1	Side panel, left
35	9264208	All models	1	Operation panel
36	9264000	All models	2	Side panel, frame
37	9172412	All models	1	Connecting cable with plug 5-20P
38	9222076	All models	1	Strain relief M20
39	9222077	All models	1	Nut, relief strain M20
40	9264621	CD 3	1	Cover profile, inner frame
40	9264616	CD 4	1	Cover profile, inner frame
40	9264611	CD 5	1	Cover profile, inner frame
41	9264084	All models	1	Side plate, left
42	9264083	All models	1	Side plate, right
43	8072098	All models	1	Indication plate
44	9264091	CD 3	1	Work plateau, service side
44	9264086	CD 4		Work plateau, service side
44	9264076	CD 5		Work plateau, service side
45	8065038	All models	2	Door handle
46	9184253	All models	2	Bumper profile
47	9086207	All models	2	Bumper
48	0147674	All models	4	Screw M 4x25, SS cross recess head (philips)
49	9241000	All models	1	Bumper, console (20 pieces)
50	9260240	CD 3	2	Back panel
50	9260242	CD 4	2	Back panel
50	9260244	CD 5	2	Back panel
51	9263022	All models	1	Plug, top glass
52	4288322	All models	8	Screw M5 x 10, SS socket button head

COLD DELI 3-4-5 SQUARE COMPONENTS DRAWING

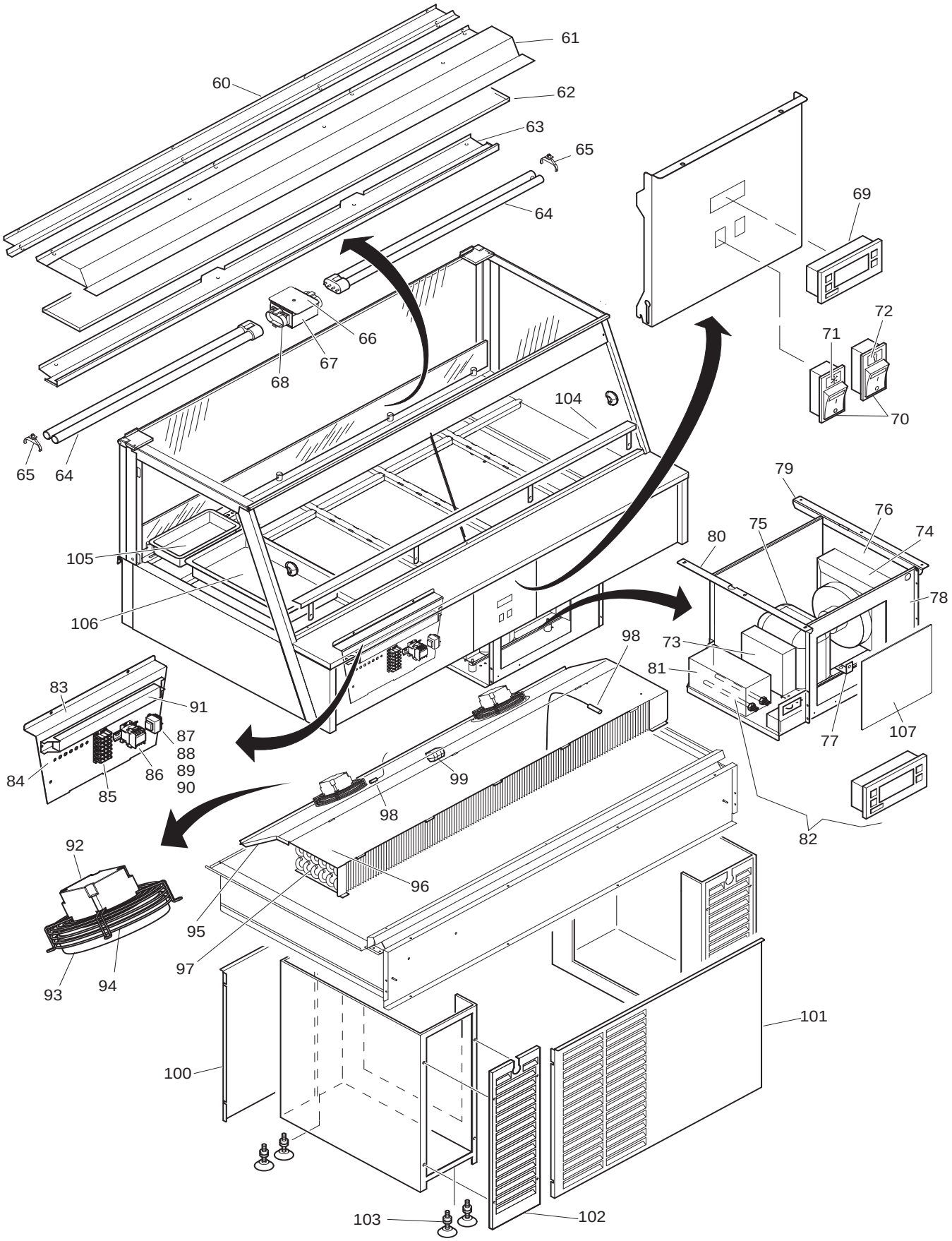

Item	Part nr.	Model	Qty	Descirption
60	9264573	CD 3	1	Locking, glas plate
60	9264564	CD 4	1	Locking, glas plate
60	9264556	CD 5	1	Locking, glas plate
61	9264570	CD 3	1	Reflector
61	9264560	CD 4	1	Reflector
61	9264550	CD 5	1	Reflector
62	9262095	CD 3	1	Glass, illumination
62	9262096	CD 4	1	Glass, illumination
62	9262097	CD 5	1	Glass, illumination
63	9264571	CD 3	1	Mounting profile, glass strip
63	9264561	CD 4	1	Mounting profile, glass strip
63	9264551	CD 5	1	Mounting profile, glass strip
64	9221006	CD 3	2	Lamp, PLL 36 W
64	9160019	CD 4	2	Lamp, PLL 55 W
64	9160019	CD 5	2	Lamp, PLL 55 W
65	9222210	All models	2	Lamp support
66	9264552	All models	1	Bracket, lamp base
67	9264554	All models	1	Cover, lamp base
68	9082897	All models	2	Lamp holder
69	**9222075S**	All models	1	Thermostat
70	9181008	All models	2	Switch, tumble
71	9261005	All models	1	Sticker, cooling
72	9181071	All models	1	Sticker, lighting
73	9261055	CD 3	1	Cooling compressor
73	9261051	CD 4	1	Cooling compressor
73	9261051	CD 5	1	Cooling compressor
74	**9261057S**	CD 3	1	Condensor with blower
74	**9261052S**	CD 4	1	Condensor with blower
74	**9261052S**	CD 5	1	Condensor with blower
75	4500214	All models	1	Pressure switch
76	9266229	CD 3	1	Cover plate, condensor
76	9264754	CD 4	1	Cover plate, condensor
76	9264753	CD 5	1	Cover plate, condensor
77	9284544	All models	1	Fastening bracket
78	9264308	All models	1	Frame, cooling unit
79	9264602	All models	1	Fastening frame
80	9264605	All models	1	Fastening frame, left
81	9264755	All models	1	Evaporator tray
82	**9222206S**	All models	1	Elements and thermostat ass.
83	9264600	All models	1	Mounting plate, electri-cal components
84	2005501	All models	1	Ground rail
85	9151010	All models	1	Connecting block
86	9221054	All models	1	Contactor
87	9181036	All models	1	Transformer 115/12 V

Item	Part nr.	Model	Qty	Descirption
88	9191218	All models	1	Fuse holder
89	9261169	All models	1	Fuse 2,5 A
90	9191250	All models	1	End cap, fuse holder
91	9222065	CD 3	1	Ballast, 55W
91	9181009	CD 4	1	Ballast, 2x 55 W
91	9181009	CD 5	1	Ballast, 2x 55 W
92	9222207	CD 3	1	Blower motor
92	9222207	CD 4	2	Blower motor
92	9222207	CD 5	2	Blower motor
93	8071028	CD 3	1	Fan blade
93	8071028	CD 4	2	Fan blade
93	8071028	CD 5	2	Fan blade
94	8071070	CD 5	2	Fan cover
94	8071070	CD 3	1	Fan cover
94	8071070	CD 4	2	Fan cover
95	9264536	CD 3	1	Fan plate
95	9264527	CD 4	1	Fan plate
95	9264511	CD 5	1	Fan plate
96	9264535	CD 3	1	Evaporator plate
96	9264525	CD 4	1	Evaporator plate
96	9264509	CD 5	1	Evaporator plate
97	9262201	CD 3	1	Evaporator
97	9262202	CD 4	1	Evaporator
97	9262203	CD 5	1	Evaporator
98	9221011	All models	2	Temperature sensor
99	8072070	All models	1	Connecting block
100	9264443	CD 3	1	Front panel
100	9264444	CD 4	1	Front panel
100	9264445	CD 5	1	Front panel
101	9264763	CD 3	1	Panel, operator side
101	9264762	CD 4	1	Panel, operator side
101	9264761	CD 5	1	Panel, operator side
102	9264760	All models	2	Hatch with louvres
103	9261012	All models	8	Adjustable leg
104	9265119	CD 3	1	Crumble profile
104	9265121	CD 4	1	Crumble profile
104	9265123	CD 5	1	Crumble profile
105	2104220	CD 3	3	Gastronorm tray 1/3
105	2104220	CD 4	4	Gastronorm tray 1/3
105	2104220	CD 5	5	Gastronorm tray 1/3
106	2104089	CD 3	3	Gastronorm tray 1/3
106	2104089	CD 4	4	Gastronorm tray 1/3
106	2104089	CD 5	5	Gastronorm tray 1/3
107	9264753	All models	1	Cover plate

CIRCUIT DIAGRAMS

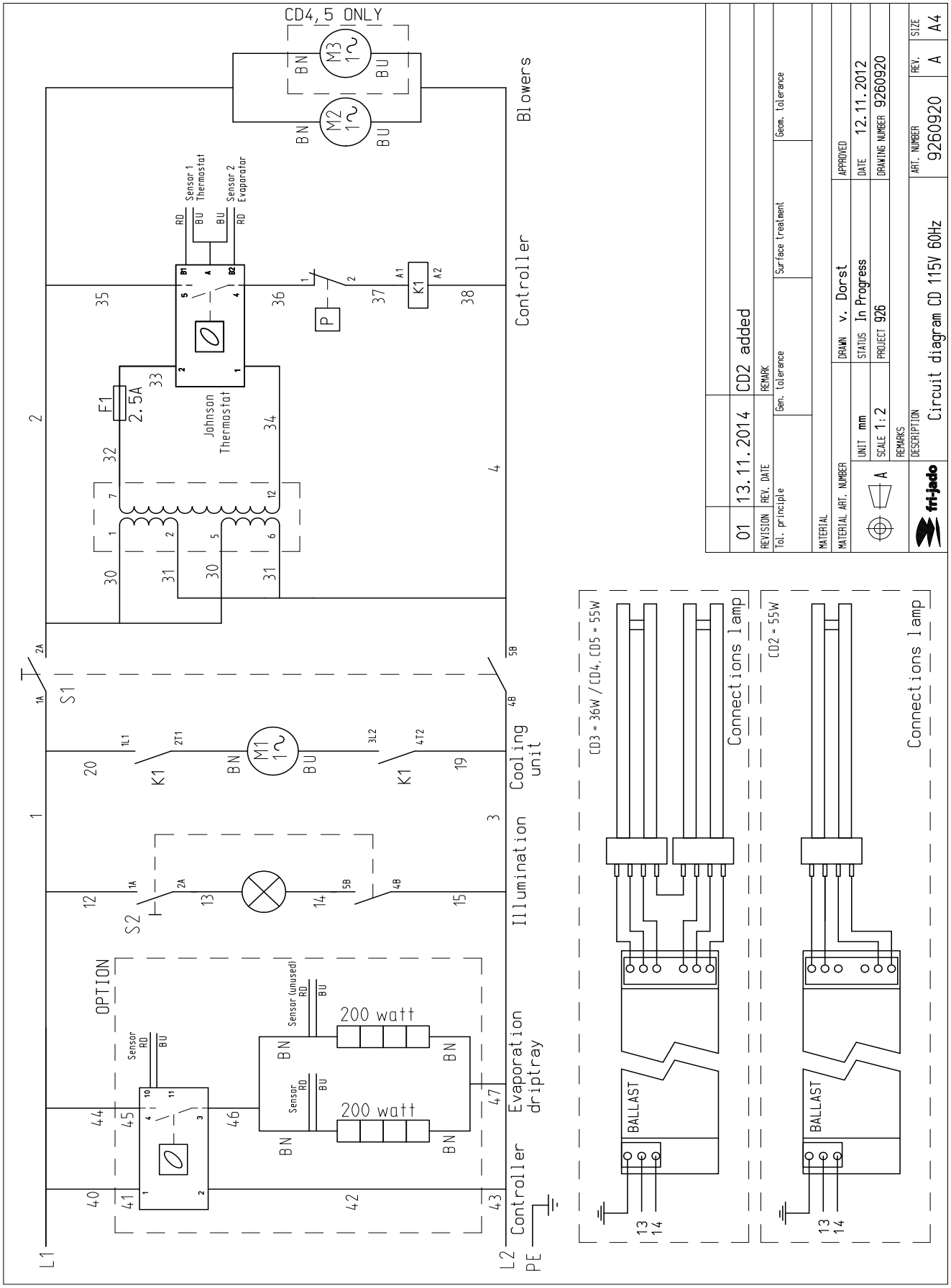

EMPTY PAGE

For technical support call:	877 374-5236
For parts call:	877 392-7851

Fri-Jado Inc. •1401 Davey Road • Sweet 100 • Woodridge, IL. 60517 • USA • tel. 630-630-7950 • fax 630-689-11424 • toll free 877-FRI-JADO • us.info@frijado.com • www.frijado.com