USER MANUAL

Multi Deck Display

WARNING
Read the instructions before using the machine.

KEEP THIS USER MANUAL FOR FUTURE USE

© 2022 Fri-Jado B.V., Oud Gastel, The Netherlands.

We advise you to contact your supplier for the guarantee period and conditions. Further we refer to our General Terms and Conditions for Sales and Delivery that are available upon request.
The manufacturer does not accept any liability for damage or injury caused by failing to adhere to these regulations or by not observing the usual caution or care in actions, operation, maintenance or repair activities, even if not explicitly described in this manual.
As a result of constant commitment to improvement, it may happen that your unit deviates in detail from what is described in this manual. For this reason, the given instructions are only a guideline for the installation, use, maintenance and repair of the unit referred to in this manual.
This manual has been composed with the utmost care. The manufacturer shall, however, not be held responsible for any mistakes in this manual nor for any consequences thereof.
The user is allowed to copy this manual for own use. Further all rights are reserved and nothing in this manual may be reproduced and/or made public in any way.

Modifications:
In case of unauthorized modifications in or on the unit, every liability on the part of the manufacturer becomes null and void.

CONTENTS

1. INTRODUCTION 4
1.1 General 4
1.2 Identification of the unit 4
1.3 Pictograms and symbols 4
1.4 Safety instructions 5
1.4.1 General 5
1.4.2 Moving (when applicable) 6
1.4.3 Outdoor use restrictions 6
1.5 Hygiene 6
1.6 Service and technical support 6
1.7 Storage 7
1.8 Disposal 7
2. DESCRIPTION OF THE UNIT 8
2.1 Technical description 8
2.2 Intended use 8
2.3 Accessories 8
3. INSTALLATION AND FIRST USE 9
3.1 Unpacking the unit 9
3.2 Installation and positioning 10
3.2.1 Applying price rail 10
3.3 Repositioning the glass shelves 10
3.4 Installation air blockers MDD 10
3.5 First use 11
4. OPERATION AND USE 12
4.1 Operating 13
5. CLEANING AND MAINTENANCE 15
5.1 Maintenance schedule 15
5.2 Daily Cleaning 15
5.3 Weekly Cleaning 15
5.4 Cleaning Glass Panes 16
6. MALFUNCTIONS AND SERVICE 18
6.1 Replace the mains cord 18
7. TECHNICAL SPECIFICATIONS 19
7.1 European Models 19
7.2 American Models 21

1. INTRODUCTION

1.1 General

This manual is intended for the user of the MDD (Multi Deck Display). The features and controls are being described, along with directions for the safest and most efficient use, in order to guarantee a long life of the unit.
This appliance is intended to be used for commercial applications, for example in kitchens of restaurants, canteens, hospitals and in commercial enterprises such as bakeries, butcheries, etc., but not for continuous mass production of food.

All pictograms, symbols and drawings in this manual apply to all available MDD models.

1.2 Identification of the unit

The identification plate can be found on the outside of the machine, and contains the following data:

- Name of the supplier or the manufacturer
- Model
- Serial number
- Year of construction
- Voltage
- Frequency
- Power consumption

1.3 Pictograms and symbols

In this manual, the following pictograms and symbols are used:

WARNING
Possible physical injury or serious damage to the unit, if the instructions are not carefully followed.

WARNING
Hazardous electrical voltage.

WARNING
Danger of getting injured by hot surfaces.

Suggestions and recommendations to simplify indicated actions.

Recycling symbol.

1.4 Safety instructions

WARNING
The outside and shelves of the unit can be very hot.

WARNING
The maximum load on top of the unit may never exceed 10 kg (22 lbs.).

WARNING
See installation instructions for grounding requirements.

WARNING
Always use the brakes on both front wheels:

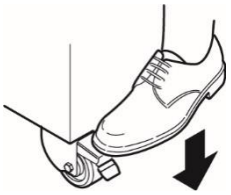

1.4.1 General

The user of the unit will be fully responsible for abiding the locally prevailing safety- rules and regulations.
The unit may be operated by qualified and authorized persons only. Anyone working on or with this unit must be familiar with the contents of this manual and carefully follow all guidelines and instructions. Never change the order of the steps to be performed. The management must instruct the personnel on the basis of this manual and follow all instructions and regulations.

The pictograms, labels, instructions and warning signs attached to the unit, are part of the safety measures. They may never be covered or removed, and have to be clearly visible during the entire lifetime of the unit.

Immediately repair or replace damaged or illegible pictograms, warnings and instructions.

- To avoid short-circuiting, never clean the unit using a water hose. For cleaning instructions, see section 5.
- The shelves, glass and back of the hot unit can get hot.
- The unit must be cleaned regularly to ensure proper functioning.
- Do not store explosive substances such as aerosol cans with flammable propellant in this appliance.
- This appliance can be used by children aged from 8 years and above and persons with reduced physical, sensory or mental capabilities or lack of experience and knowledge if they have been given supervision or instruction concerning use of the appliance in a safe way and understand the hazards involved.
- Children shall not play with the appliance.
- Cleaning and user maintenance shall not be performed by children without supervision.

1.4.2 Moving (when applicable)

When moving the unit:

- Before moving the unit, first switch off the mains voltage by pulling the plug from the wall socket.
- Remove pans containing a liquid product from the unit.
- Always keep the unit in upright position.
- Make sure that the wheels can move freely, so they never touch the power lead.

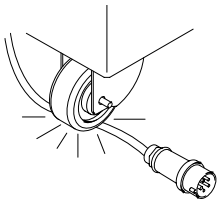

1.4.3 Outdoor use restrictions

WARNING

To avoid short-circuiting, the units may not be used outdoors or in a rainy or very moist environment.

1.5 Hygiene

WARNING

Immediately remove products in damaged packaging from the equipment and destroy the products. Clean all components that have come in contact with products from damaged packaging.

The quality of a fresh product always depends on hygiene. It is essential that products are packaged immediately after preparation. For hot products, the core temperature of the products at packaging should at least be 85 ºC (185 ºF).

Refer to the cleaning instructions of section 5.

1.6 Service and technical support

The electrical schematics of your unit is included. In case of malfunctions you can contact your dealer/service agent. Make sure you have the following data available:

- Model.
- Serial number.

This data can be found on the identification plate.

1.7 Storage

If the unit will not be used temporarily, and will be stored, follow these instructions:

- Clean the unit thoroughly.
- Wrap the unit from getting dusty.
- Store the unit in a dry, non-condensing environment.
- Ensure good ventilation.

1.8 Disposal

Dispose of the machine, any components or lubricants removed from it safely in accordance with all local and national safety and environment requirements.

2. DESCRIPTION OF THE UNIT

2.1 Technical description

The panels are made of galvanized steel plating, stainless steel or aluminium. Some of the visible internal and external parts have been provided with a powder coating. The glass used is tempered. The controls for operating the appliance have been mounted on the operator side of the unit. The product contact parts are made of stainless steel AISI 304 or AISI 430 and tempered glass.

Heating in the unit is achieved by means of heated shelves in combination with an hot-air curtain per shelf. The air curtain isolates the hot air inside the unit from the ambient air.
An electronic thermostat controls the temperature. There are two controlling variants at the MDD models; a single temperature controller and a multi temperature controller which allows each shelf to have its own operation temperature. At both variants the electronic thermostat has been set at the correct value at the factory. The set temperature can be changed between 40 ºC and 70 ºC (104 ºF and 158 ºF). One LED-module per level provides for lighting of the products. The LED-lighting and the heating are switched on and off separately. There are two MDD user variants; a solid back version and a pass through version which allows the user to (re)fill products via the back side.

2.2 Intended use

MDD models have been designed solely to keep packaged products warm and to display them.
Any other use will not be regarded as intended use. The manufacturer accepts no liability whatsoever for loss or injury caused by failing to strictly adhere to the safety guidelines and instructions in this manual or due to carelessness during installation, use, maintenance and repair of the unit referred to in this manual and any of its accessories.

Use the unit in perfect technical condition only.

2.3 Accessories

Your unit contains the following standard accessories:

- User manual.

For optional accessories see www.frijado.com.

3. INSTALLATION AND FIRST USE

All packing materials used for this unit are suited for recycling.

Before and during unpacking, check the state of the unit. In case of damage, store the packing material, and contact the transporter within fifteen working days after receiving the goods.

3.1 Unpacking the unit

The MDD is placed inside a crate during transport.

1. Remove the top crate pane and foam.
2. Remove the front and rear boards.
3. Remove both side boards.
4. Remove Tempex (EPS) and foils.
5. Lift the unit from the support beams using a pallet truck or forklift.
6. Remove the supporting beams.
7. Observe the safety and warning signs.

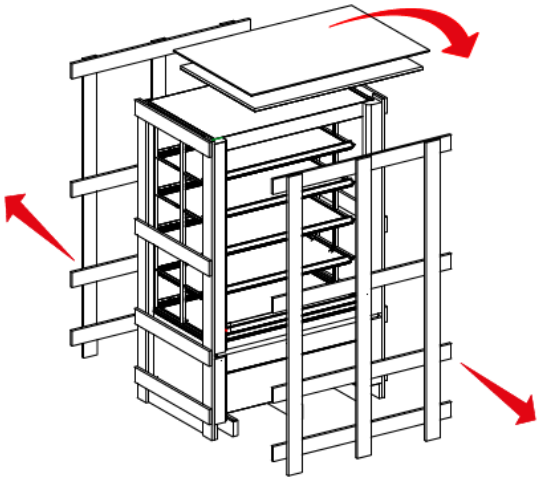

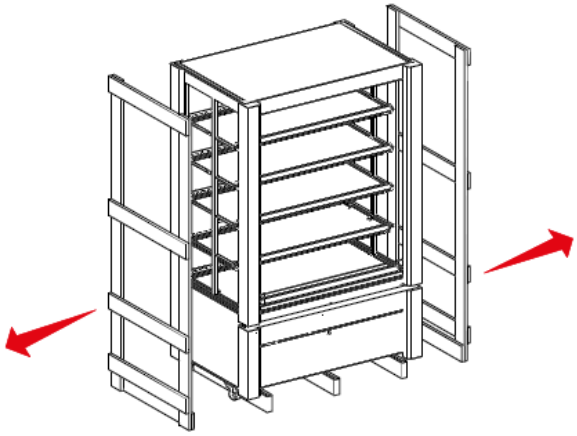

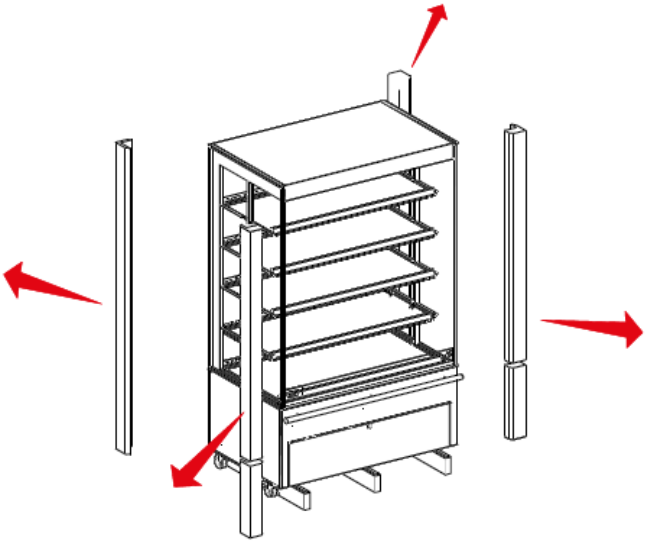

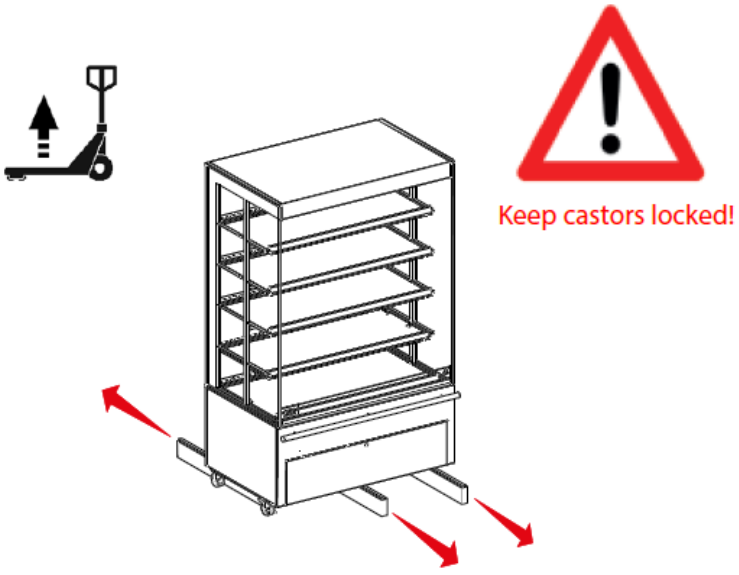

3.2 Installation and positioning

WARNING

Electric chock hazard. Grounding instructions: only connect the appliance to an alternating current provided by a grounded wall socket, with a mains voltage in accordance with the information indicated on the data plate of the appliance.

It is the consumer's responsibility to make sure the electrical installation conforms with current national and local codes and wiring regulations.

Do not use a multi plug or extension cord. Such can result in fire, electrical shock, or other personal injury.

Failure to follow these instructions can result in death or serious injury.

WARNING

Position the unit on a flat and horizontal surface. A temporally inclined plane of maximum 5° is allowed.

- Be sure that the personnel have sufficient room to work with the unit.
- Keep a distance of at least 150 mm (6 inch) between the back wall and the unit.
- While positioning, keep the unit out of children's reach.
- Do not position a unit near a doorway, a ventilation device or a refrigerator in order to avoid any negative effects on the unit's operation by a cold airflow. The unit is designed for a maximum draft of 0.2 m/s (0.65 ft./sec).
- Do not place into direct sunlight.
- The unit should not be used below 20 ºC (68 ºF) ambient temperatures.
- The unit has a mains plug, and must be connected to a wall socket with the proper mains voltage. The wall socket must be mounted by a certified electrician.

3.2.1 Applying price rail

Optional price rails can be mounted using the front screws underneath each of the shelves.

3.3 Repositioning the glass shelves

The glass shelves can be positioned at two angled positions (0º and 3º). Refer to installation manual.

3.4 Installation air blockers MDD

It is important that the air blockers will be installed on the shelves. Because without the air blockers the performance of the MDD cannot be guaranteed! The installation of the air blockers is shown on the next page.

The air blockers have the following numbers:

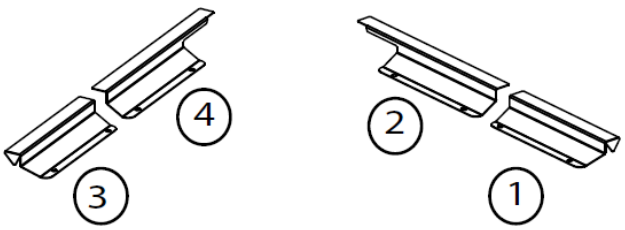

Installation air blockers MDD

There are 4 types of air blockers which need to be installed according the next steps:

1. Mount the air blockers under the shelfs at the 4 positions.
2. Mount air blocker 1 and 2 on the right hand side of the shelf with 4 screws (hand tight).
3. Repeat step 2 with air blocker 3 and 4 on the left side of the shelf.
4. Repeat steps 2 and 3 for all the shelves.

1.

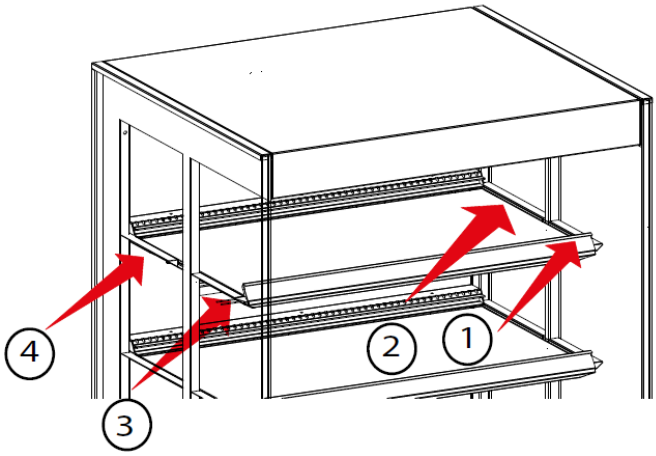

2.

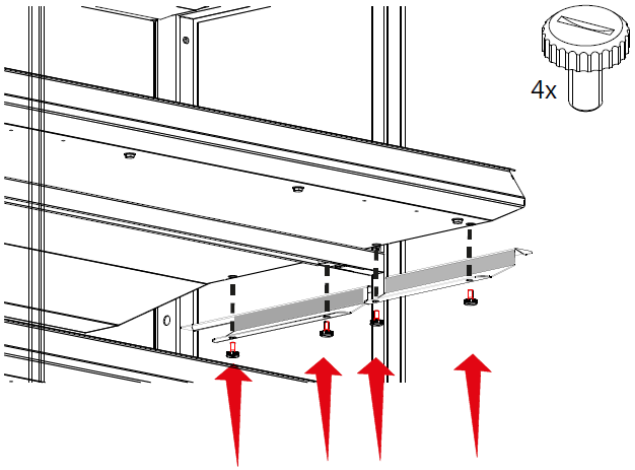

3.

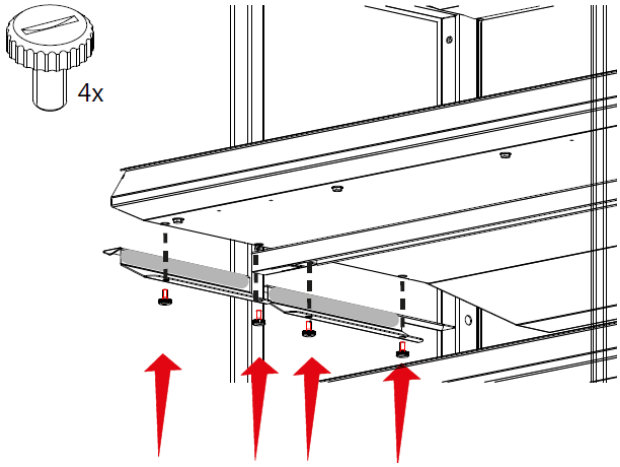

4.

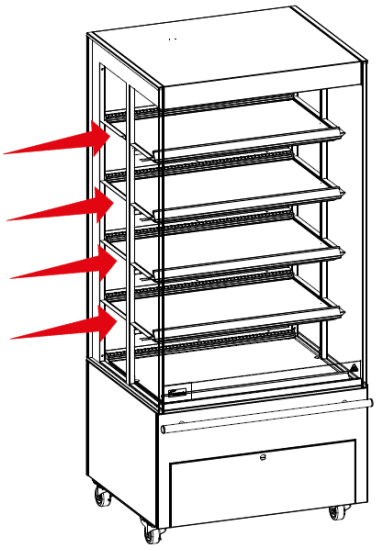

3.5 First use

Before starting to use the unit, clean the inside thoroughly with mild detergent and water.
After cleaning it wipe it with a cloth moistened with clean water to remove residual detergent, then dry the entire unit.

4. OPERATION AND USE

The display and/or set value is not the product/unit temperature.

Control Panel

On/Off Switch(es): 3 level model: switch at the top of the back of the unit. 4 and 5 level model: Switches located at the top of the front next to the lighting and one located at the top of the back.

Controls:

Note: Models with a solid back have the control panel located behind the front panel.

1 Temperature controller (heating)
2 Lighting switch

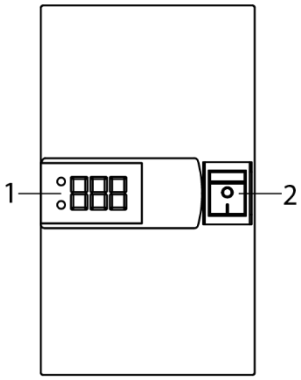

Single temperature controller

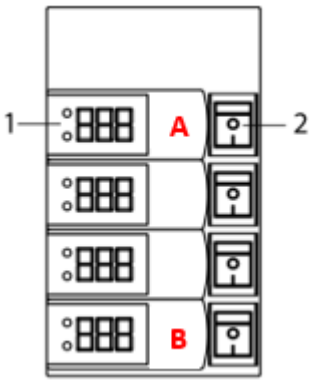

Multi temperature controller (MDD 4 shelves shown)

Single temperature controller
One controller to switch on/off and control all the shelves. One lighting switch to switch on/off all the lights.

Display multi temperature controller
One controller to switch on/off and control each shelf on its own. One lighting switch to switch on/off each light on its own. The controllers and lighting switches are positioned in the same way as the shelfs and the lights. So letter ´**A**´ shows the top shelf controller/light switch and letter ´**B**´ shows the bottom shelf controller/light switch. The number of controllers depends on the quantity of the shelves.

Using the multi-temperature controllers
With multi-temp technology shelves can be controlled individually or even turned off completely. In this way optimal holding conditions for different food groups can be achieved (for example: depending on holding time, product quality, packaging and accessories used). When set to the same temperature uniform temperatures can be attained throughout the cabinet and energy can be saved. Although every combination of settings is possible (ranging from completely off to a setpoint between 40 °C and 70 °C), certain settings may influence the time it takes for a shelf to reach operating temperature. For example, if only one shelf is turned on it may take over 60 minutes instead of approx. 30 minutes when shelves are all set to the same temperature. If a range of setpoints is desired, it is advised to assign the highest setpoint to the top shelf and the lowest setpoint to the bottom shelf for optimal performance and energy savings. If you need any assistance in determining the best setup for your hot food-to-go offering (such as temperature setpoint, packaging and accessories), please contact Fri-Jado.

MDD-60 models only: Always switch on two adjacent shelves to achieve the desired temperature.

Temperature controller

⏻	Power on/off button*
∧	UP-button
∨	DOWN-button
SET↵	SET-button

Image for reference only.

* Switch on/off: hold for several sec.

4.1 Operating

The unit is set at 65 ºC (149 ºF) intake air temperature. If required this temperature can be adjusted.

At an ambient temperature of 20 ºC (68 ºF) and an initial core temperature of 85 ºC (185 ºF) these factory settings of the unit's temperature ensure a constant core temperature of at least 63 ºC (145.5 ºF) for 4 hours.

Switching-on the unit

- Switch on one of the two main power switches (The fans will start blowing).
- Switch the heating on, by means of the temperature controller.
- Preheat the unit (may take between 30 and 90 minutes depends on controller settings).
- Switch on the lighting.

Loading the unit

- Only place products that have a core temperature of at least 85 ºC (185 ºF).
- The hot products need to be packaged in bags or containers that are suitable for this purpose.
- To ensure a good contact with the heated trays, only place a single layer of products.
- The maximum loading height is 50 mm (2 inch) below the bottom of the shelf/air guide above.
- The maximum carrying-capacity per shelf is 30 kg/m (66 lbs/m), by equal load.

Checking the temperature in the unit

- During operation the display of the thermostat shows the temperature at the probe in the unit. The indication ON will lit when the elements are active.

Checking the SET temperature

1. Scroll through the folders with ∧ and ∨ until you find the folder **Pb1**, **Pb2** or **Pb3**.
2. Press **SET** to view the value measured by the corresponding probe.

Adjusting the SET Temperature

- During operation the display of the thermostat shows the temperature in the unit.
- Push once on the SET-button. The set temperature will appear on the display.
- Push the UP and DOWN button within 15 sec.
- Adjust the set temperature by means of the UP-button and the Down-button.
- Push once on the SET-button to store the new set temperature.

Checking the product temperature

- Once every hour, the product temperature should be checked using a digital thermometer.
- Write down the measured values in a log.
- Always use a disinfected thermometer sensor.

Switching off

- Remove all products from the unit. In order to avoid temperature drop of the products, store them in another warm holding unit.
- Switch the heating off.
- Switch the lighting off.
- Switch the main power off.

5. CLEANING AND MAINTENANCE

WARNING

Never use a water hose for cleaning. Water can seep into the unit through the ventilation holes of the unit.

Appliances must be disconnected from their power supply during cleaning or maintenance and when replacing parts.

Because of hygiene aspects and optimum condition of the unit it is of utmost importance to keep a daily cleaning pattern from first use onwards.

5.1 Maintenance schedule

Item	Action	Frequency
Inside	• Clean, see section 5.2.	Daily
Outside	• Clean, see section 5.3. • Use Stainless Steel cleaning spray to remove stains, and restoring the gloss.	Weekly
Glass panes	• Clean Glass panes, see section 5.4.	Weekly

5.2 Daily Cleaning

- Clean the inside of the unit with hot water and a suitable cleaner.
- After cleaning wipe the inside with a clean wet cloth. Be sure that the detergent is removed properly.

5.3 Weekly Cleaning

WARNING

The control panel may only be cleaned using a damp cloth.

- Clean the outside of the unit with a small amount of hot water and a mild cleanser and using a soft brush or sponge. After cleaning it dry the outside with a cloth.
- Treat all cleaned surfaces with a suitable antibacterial agent.
- Rub dry with a soft cloth or a paper towel.

5.4 Cleaning Glass Panes

Cleaning the top glass pane (3 level models)

Lift and hold the top glass while cleaning the top glass pane.

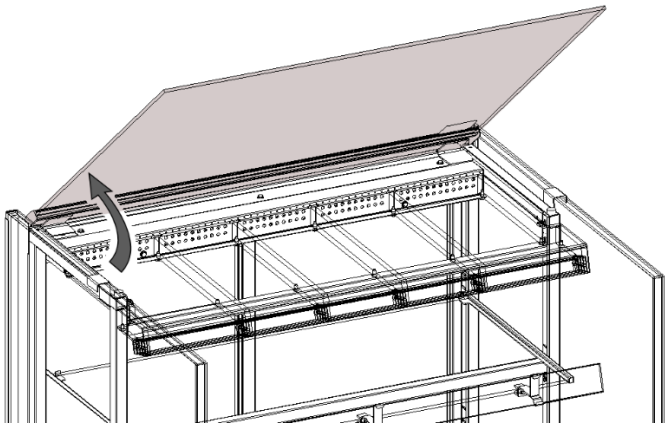

Cleaning the top air guides (3 level models)

WARNING

Do not use detergents and other cleaning products that may damage polycarbonate. Using inappropriate products to clean may tarnish, scratch or even crack any polycarbonate surfaces.

The transparent air guide pane can be removed for cleaning.

- Lift and hold up the top glass pane throughout the process.
- The air guide pane is laid up freely and somewhat flexible and can as such easily be removed from its support on the rear by applying a light amount of torsion.
- After cleaning, place the air guide pane back by applying some light torsion.
- Close the top glass pane.

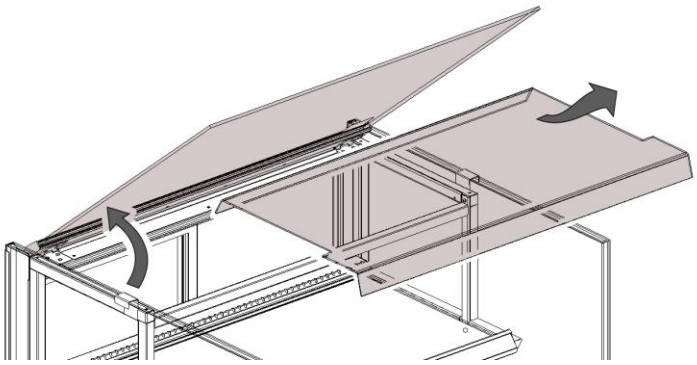

Cleaning the side double-glass pane (all models)

- Slide the double glass pane towards the front along the top (A) and bottom (B) guiding rails. The side pane can be removed from the unit once it has slid in its entirety past the top guide.

  CAUTION: Once past the top guide, the glass pane might fall if not properly held. Hence do not leave it standing upright without being supported by both guide rails or holding it.

- It is recommended to only move the pane to such an extent that the pane areas next to the support columns can be cleaned.

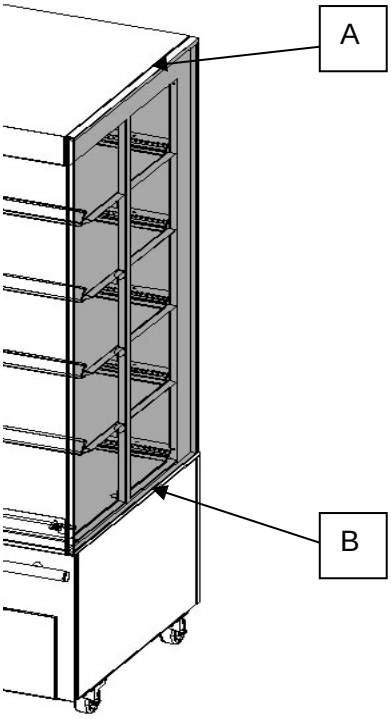

- To clean the guiding rails, the pane can be removed in its entirety.

- If the pane was removed and needs to be placed back in, before sliding the pane back into the rails, ensure the transparent sides of the pane are facing forwards and up. Then slide it all the way back till the front of the pane is in line with the front plating.

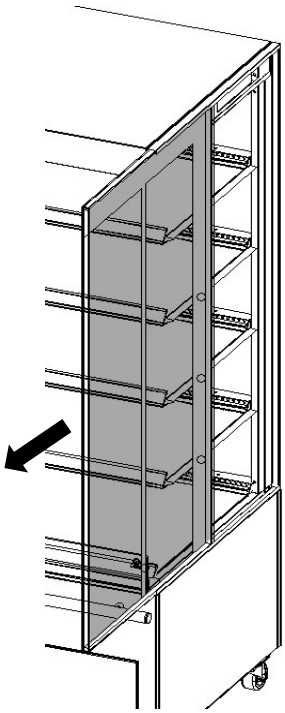

6. MALFUNCTIONS AND SERVICE

Before you consult your dealer or the service agency when there is a fault, you can check the following points yourself:

Is the power supply OK? Check the fuses and the earth leakage switch in the meter cupboard.

Are all the switches in the correct position?

Item	Malfunction	Possible action
Unit	Unit does not work	• Check the power supply. • Are all switches in the correct position.
Unit	Display shows error code	• Contact your supplier or service agency.
Unit	Unit does not reach set temperature	• Check correct placing air blockers, see section 3.4.
Lamp	Does not light up	• Switch ON.
Mains cord	Damaged	• Replace, see section 6.1.
Window	Damaged	• Replace, contact your supplier or service agency.

6.1 Replace the mains cord

WARNING

Hazardous electrical voltage.

If the mains cord is damaged, it must be replaced by the manufacturer, his service agent or a similarly qualified person in order to avoid hazards.

7. TECHNICAL SPECIFICATIONS

WARNING

Consult the identification plate to get the proper specifications of the unit. The electrical data may vary from country to country.

7.1 European Models

Model	**MDD 60-3**	**MDD 90-3**	**MDD 120-3**
Approved for	EU	EU	EU
Width	600 mm	900 mm	1200 mm
Depth	810 mm	810 mm	810 mm
Depth without bumper	750 mm	750 mm	750 mm
Height on legs	1420 mm	1420 mm	1420 mm
Weight Net Approx.	157 kg / 335 lbs	187 kg / 397 lbs	217 kg / 459 lbs
Ambient Temperature	min. 20 ºC / 68 ºF max. 30 ºC / 86 ºF	min. 20 ºC / 68 ºF max. 30 ºC / 86 ºF	min. 20 ºC / 68 ºF max. 30 ºC / 86 ºF
Relative humidity	max. 60%	max. 60%	max. 60%
Noise level (at workplace)	<70 dB(A)	<70 dB(A)	<70 dB(A)
Voltage	1N~ 230 V	1N~ 230 V	3N~ 400/230 V
Frequency	50/60 Hz	50/60 Hz	50/60 Hz
Max. nominal Current	9.5 A	13 A	7.2 A
Plug	2 pole earthed plug 16A	2 pole earthed plug 16A	CEE-form 16 A
Length power cord approx.	1.5 m	1.5 m	1.5 m

Model	**MDD 60-4**	**MDD 90-4**	**MDD 120-4**
Approved for	EU	EU	EU
Width	600 mm	900 mm	1200 mm
Depth	810 mm	810 mm	810 mm
Depth without bumper	750 mm	750 mm	750 mm
Height on legs	1725 mm	1725 mm	1725 mm
Weight Net Approx.	190 kg / 419 lbs	220 kg / 485 lbs	250 kg / 551 lbs
Ambient Temperature	min. 20 ºC / 68 ºF max. 30 ºC / 86 ºF	min. 20 ºC / 68 ºF max. 30 ºC / 86 ºF	min. 20 ºC / 68 ºF max. 30 ºC / 86 ºF
Relative humidity	max. 60%	max. 60%	max. 60%
Noise level (at workplace)	<70 dB(A)	<70 dB(A)	<70 dB(A)
Voltage	1N~ 230 V	3N~ 400/230 V	3N~ 400/230 V
Frequency	50/60 Hz	50/60 Hz	50/60 Hz
Max. nominal Current	11.3 A	7.7 A	10.2 A
Plug	2 pole earthed plug 16A	CEE-form 16 A	CEE-form 16 A
Length power cord approx.	1.5 m	1.5 m	1.5 m

Model	MDD 60-5	MDD 90-5	MDD 120-5
Approved for	EU	EU	EU
Width	600 mm	900 mm	1200 mm
Depth	810 mm	810 mm	810 mm
Depth without bumper	750 mm	750 mm	750 mm
Height on legs	1975 mm	1975 mm	1975 mm
Weight Net Approx.	209 kg / 461 lbs	254 kg / 560 lbs	300 kg / 661 lbs
Ambient Temperature	min. 20 ºC / 68 ºF max. 30 ºC / 86 ºF	min. 20 ºC / 68 ºF max. 30 ºC / 86 ºF	min. 20 ºC / 68 ºF max. 30 ºC / 86 ºF
Relative humidity	max. 60%	max. 60%	max. 60%
Noise level (at workplace)	<70 dB(A)	<70 dB(A)	<70 dB(A)
Voltage	3N~ 400/230 V	3N~ 400/230 V	3N~ 400/230 V
Frequency	50/60 Hz	50/60 Hz	50/60 Hz
Max. nominal Current	5.8 A	7.7 A	10.2 A
Plug	CEE-form 16 A	CEE-form 16 A	CEE-form 16 A
Length power cord approx.	1.5 m	1.5 m	1.5 m

7.2 American Models

Model	MDD 24-3	MDD 36-3	MDD 48-3
Approved for	USA / CAN	USA / CAN	USA / CAN
Width	23 5/8 in	35 7/16 in	47 1/4 in
Depth	31 7/8 in	31 7/8 in	31 7/8 in
Depth without bumper	29 1/2 in	29 1/2 in	29 1/2 in
Height on legs	55 15/16 in	55 15/16 in	55 15/16 in
Weight Net Approx.	157 kg / 335 lbs	187 kg / 397 lbs	217 kg / 459 lbs
Ambient Temperature	min. 20 ºC / 68 ºF max. 30 ºC / 86 ºF	min. 20 ºC / 68 ºF max. 30 ºC / 86 ºF	min. 20 ºC / 68 ºF max. 30 ºC / 86 ºF
Relative humidity	max. 60%	max. 60%	max. 60%
Noise level (at workplace)	<70 dB(A)	<70 dB(A)	<70 dB(A)
Voltage	1~ 208 V	1~ 208 V	3~ 208 V
Frequency	50/60 Hz	50/60 Hz	50/60 Hz
Max. nominal Current	10.5 A	14.4 A	13.7 A
Plug	NEMA 6-20P	NEMA 6-20P	NEMA 15-30P
Length power cord approx.	10 ft	10 ft	10 ft

Model	MDD 24-4	MDD 36-4	MDD 48-4
Approved for	USA / CAN	USA / CAN	USA / CAN
Width	23 5/8 in	35 7/16 in	47 1/4 in
Depth	31 7/8 in	31 7/8 in	31 7/8 in
Depth without bumper	29 1/2 in	29 1/2 in	29 1/2 in
Height on legs	67 7/8 in	67 7/8 in	67 7/8 in
Weight Net Approx.	190 kg / 419 lbs	220 kg / 485 lbs	250 kg / 551 lbs
Ambient Temperature	min. 20 ºC / 68 ºF max. 30 ºC / 86 ºF	min. 20 ºC / 68 ºF max. 30 ºC / 86 ºF	min. 20 ºC / 68 ºF max. 30 ºC / 86 ºF
Relative humidity	max. 60%	max. 60%	max. 60%
Noise level (at workplace)	<70 dB(A)	<70 dB(A)	<70 dB(A)
Voltage	1~ 208 V	3~ 208 V	3~ 208 V
Frequency	50/60 Hz	50/60 Hz	50/60 Hz
Max. nominal Current	12.5 A	14.7 A	19.5 A
Plug	NEMA 6-20P	NEMA 15-30P	NEMA 15-30P
Length power cord approx.	10 ft	10 ft	10 ft

Model	MDD 24-5	MDD 36-5	MDD 48-5
Approved for	USA / CAN	USA / CAN	USA / CAN
Width	23 5/8 in	35 7/16 in	47 1/4 in
Depth	31 7/8 in	31 7/8 in	31 7/8 in
Depth without bumper	29 1/2 in	29 1/2 in	29 1/2 in
Height on legs	77 3/4 in	77 3/4 in	77 3/4 in
Weight Net Approx.	209 kg / 461 lbs	254 kg / 560 lbs	300 kg / 661 lbs
Ambient Temperature	min. 20 ºC / 68 ºF max. 30 ºC / 86 ºF	min. 20 ºC / 68 ºF max. 30 ºC / 86 ºF	min. 20 ºC / 68 ºF max. 30 ºC / 86 ºF
Relative humidity	max. 60%	max. 60%	max. 60%
Noise level (at workplace)	<70 dB(A)	<70 dB(A)	<70 dB(A)
Voltage	3~ 208 V	3~ 208 V	3~ 208 V
Frequency	50/60 Hz	50/60 Hz	50/60 Hz
Max. nominal Current	11.2 A	14.7 A	19.5 A
Plug	NEMA 15-30P	NEMA 15-30P	NEMA 15-30P
Length power cord approx.	10 ft	10 ft	10 ft

Notes.

Fri-Jado Inc.
1401 Davey Road, Suite 100
Woodridge IL 60517
USA
Tel: +1-630-633-7950

www.frijado.com