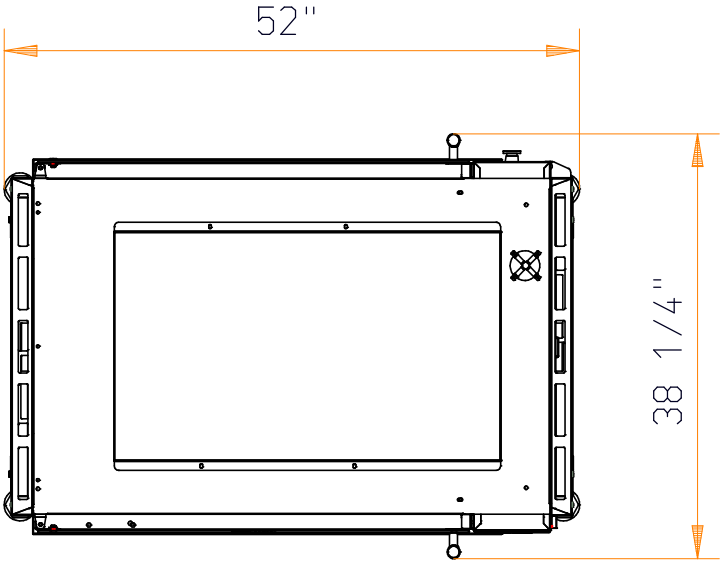
52"
38 1/4"

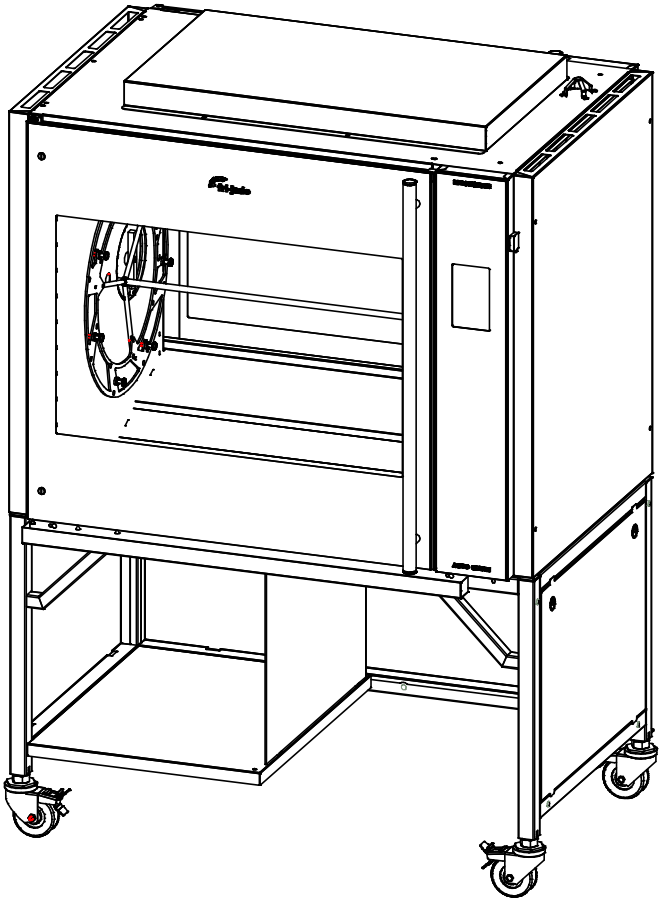

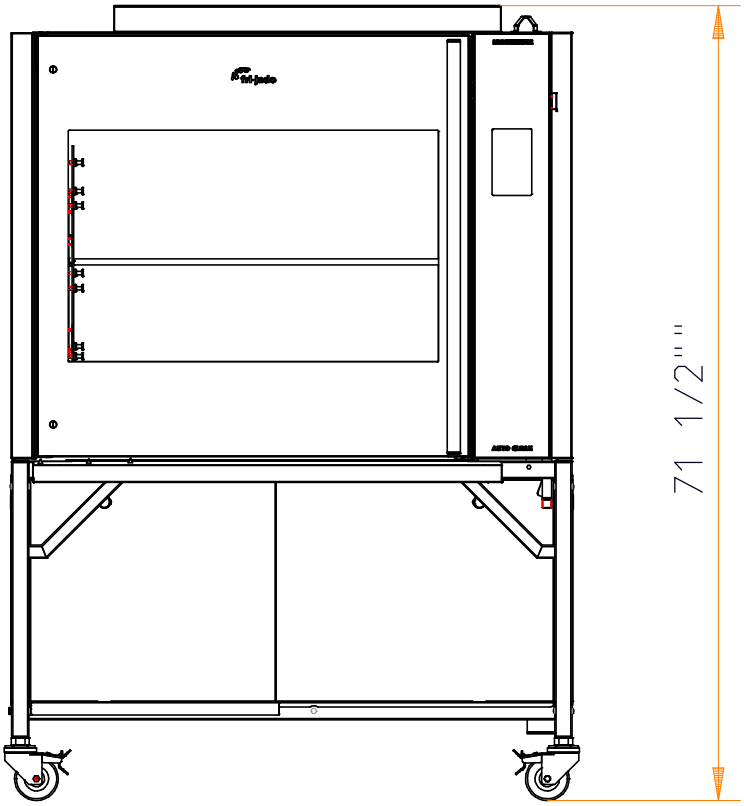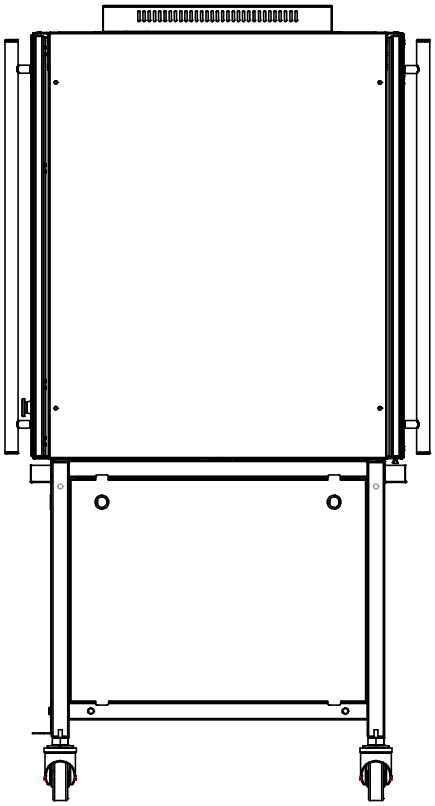
71 1/2"