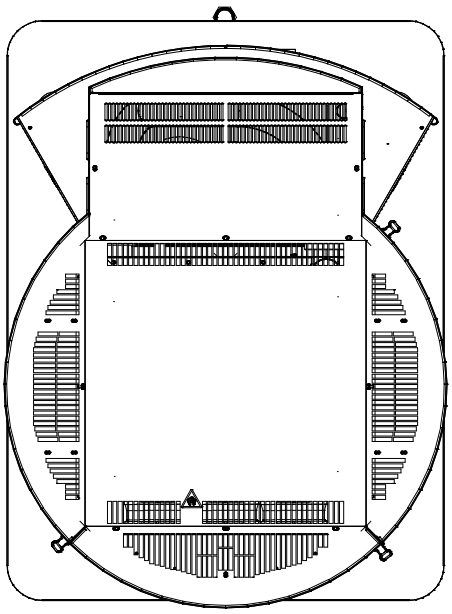

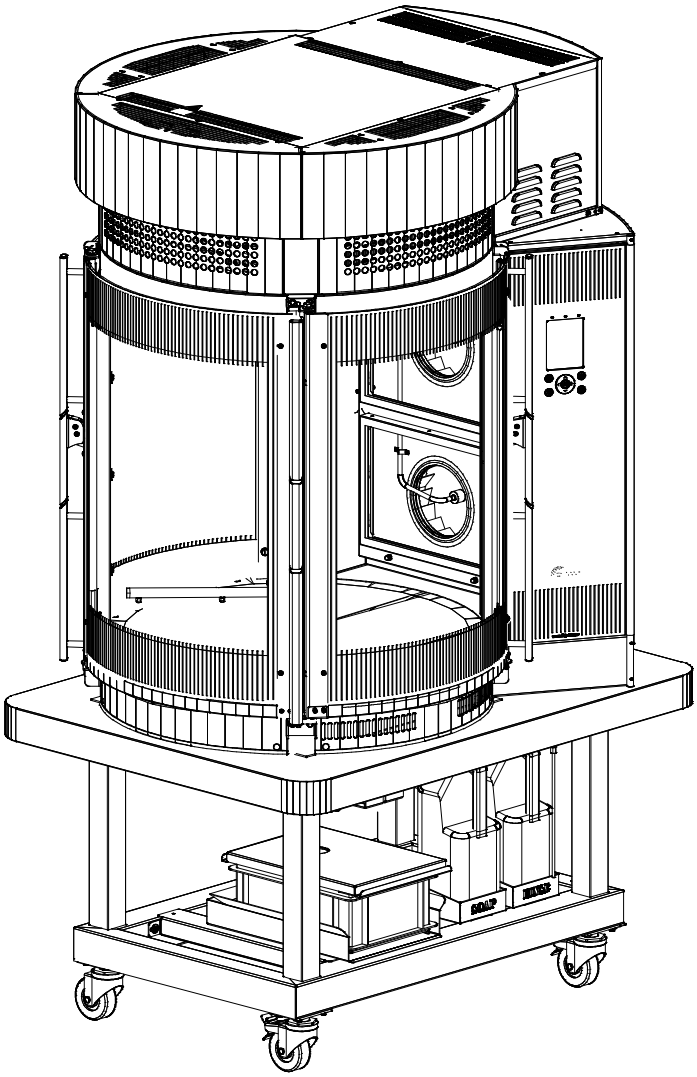
SOAP
RINSE

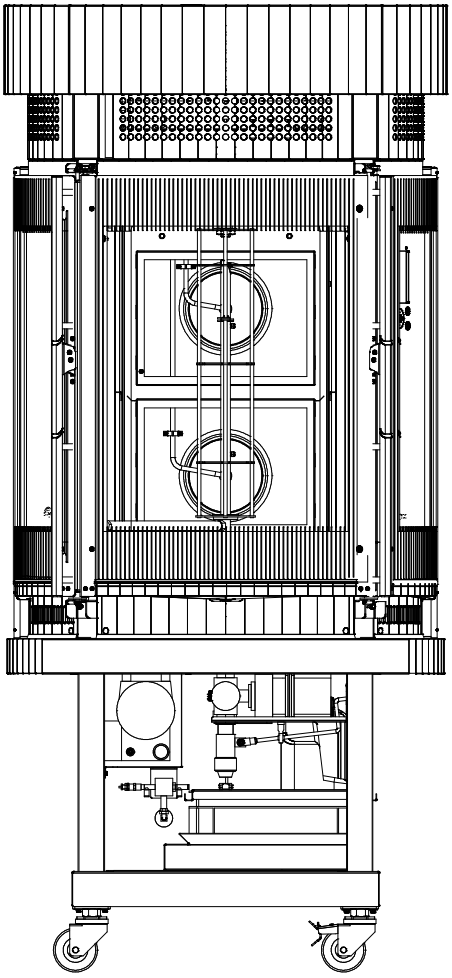

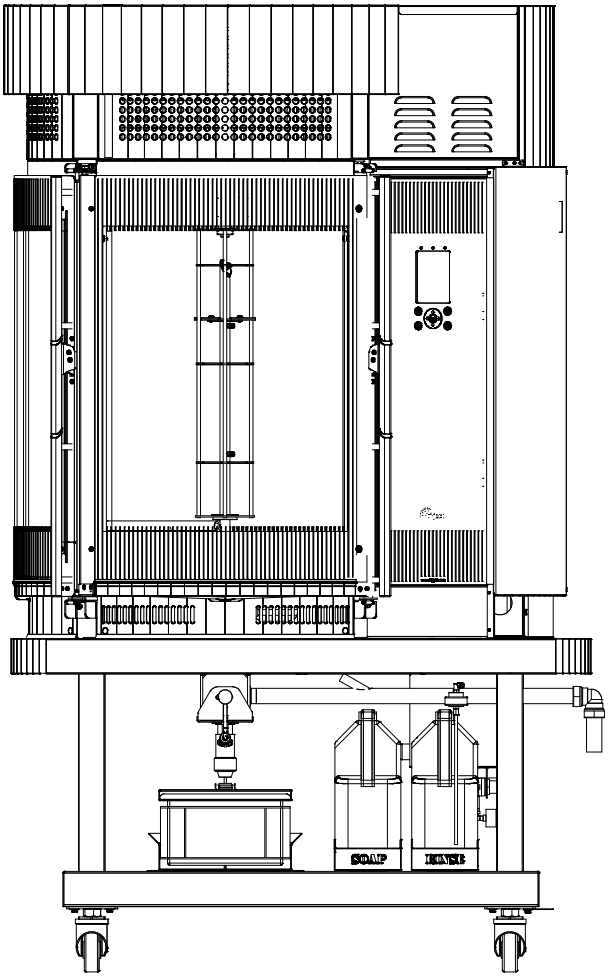
SOAP
RINSE