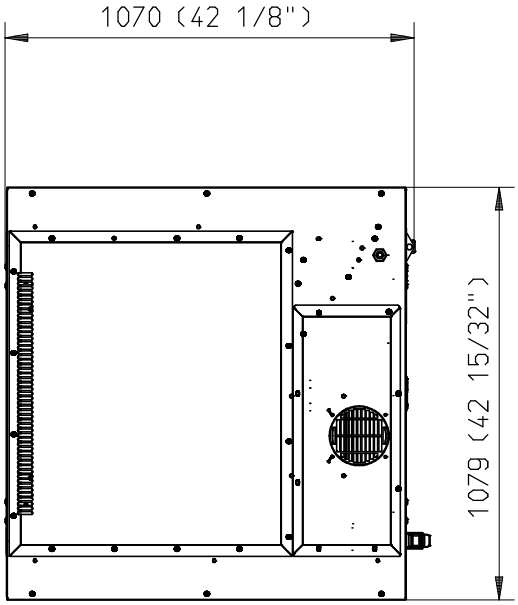
1070 (42 1/8")
1079 (42 15/32")

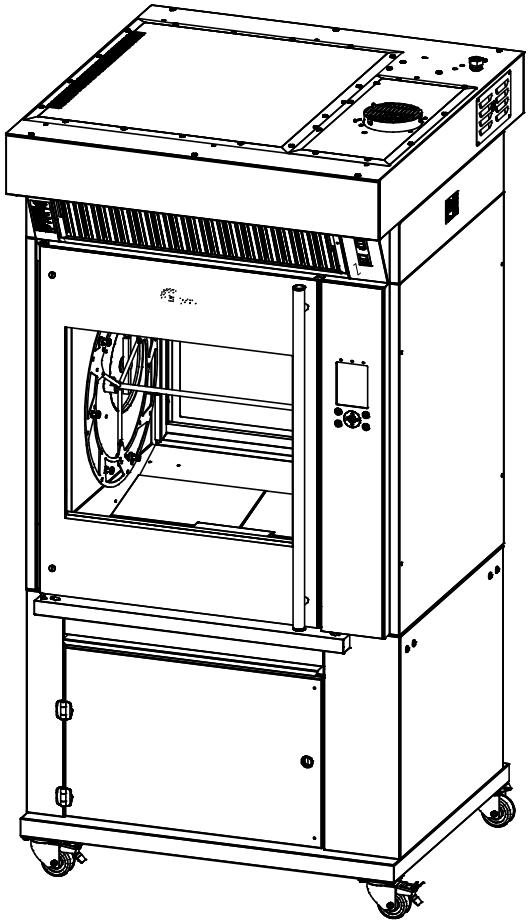

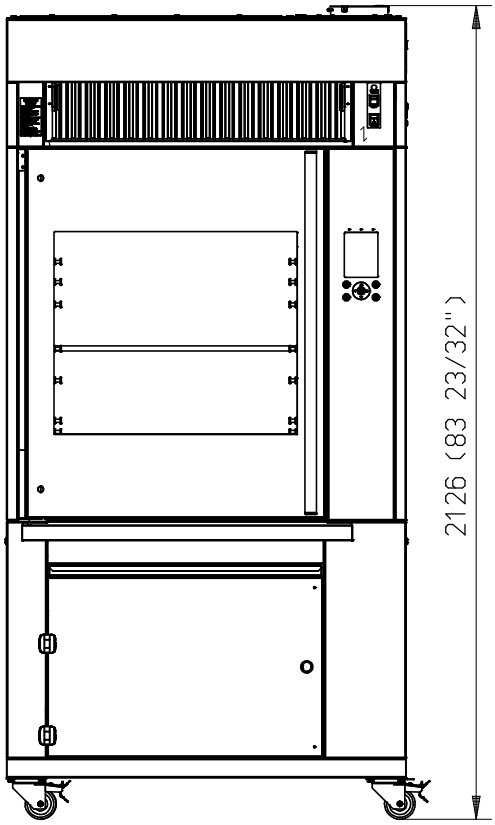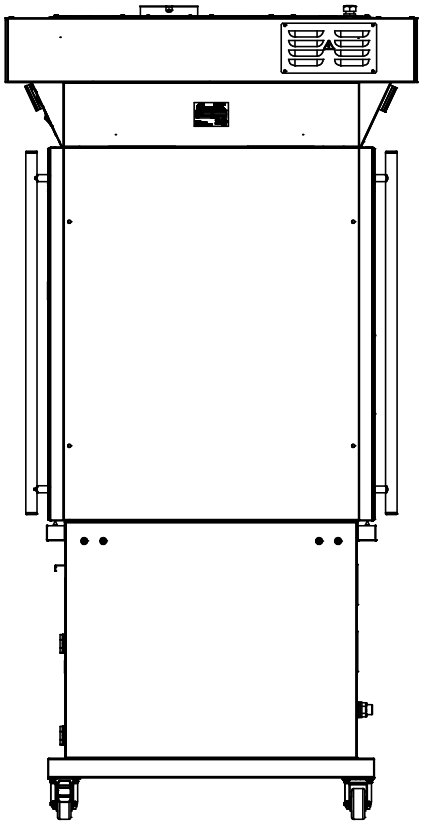
2126 (83 23/32")