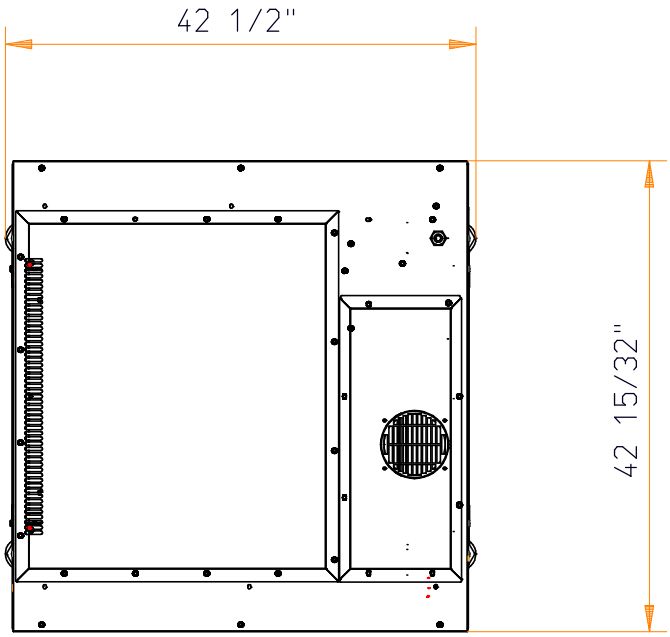
42 1/2"
42 15/32"

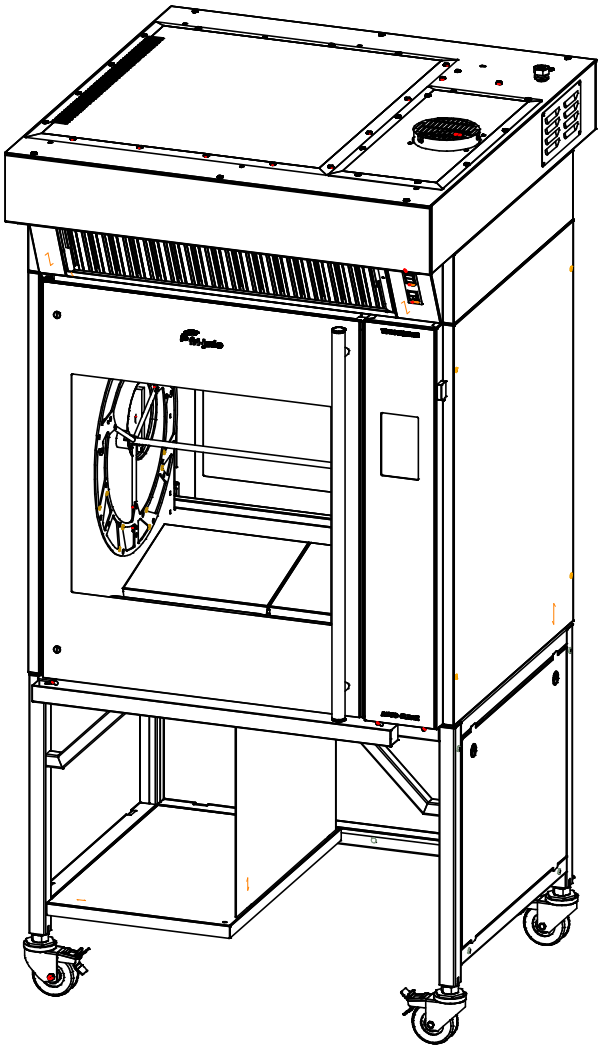

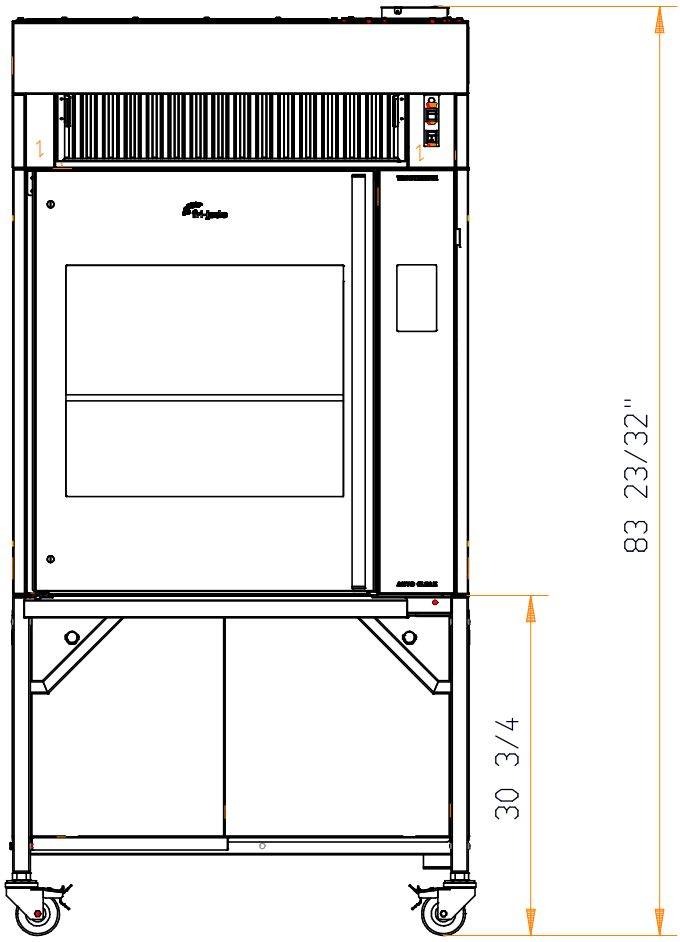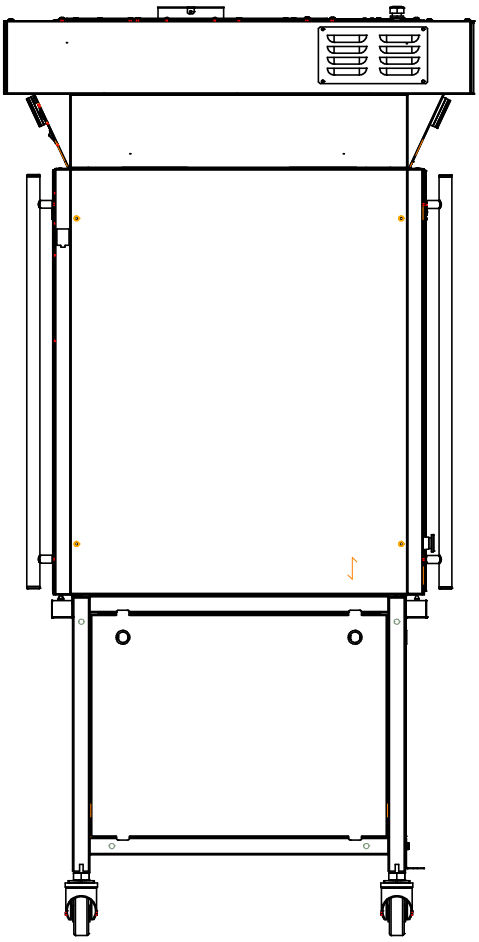
83 23/32"
30 3/4