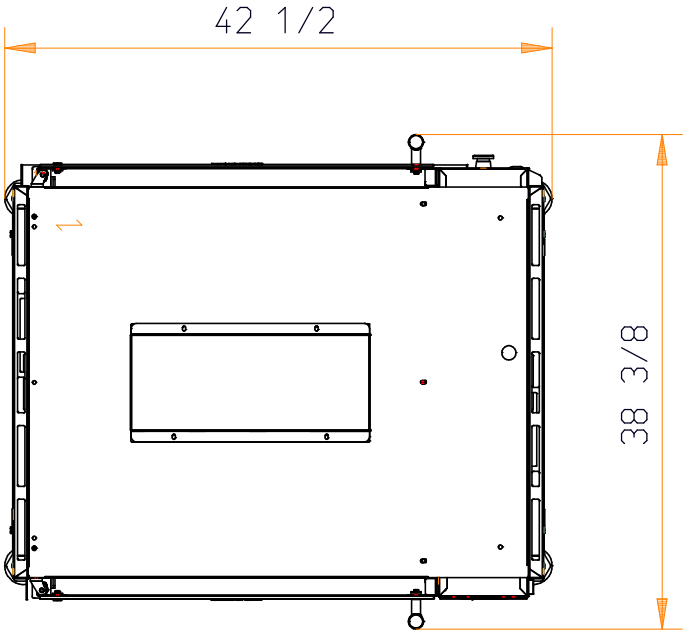
42 1/2
38 3/8

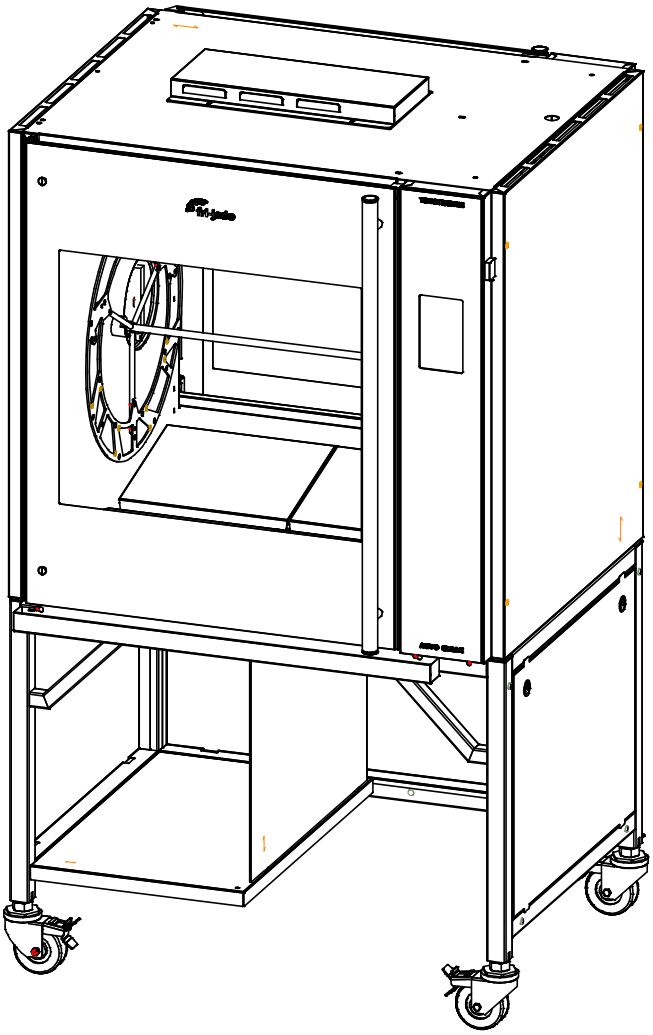

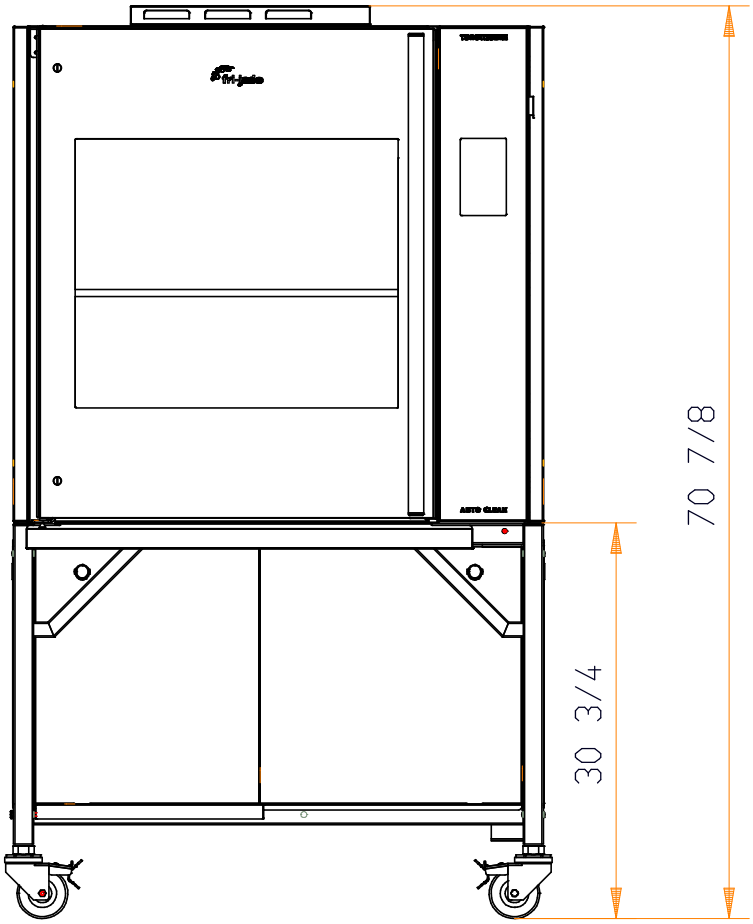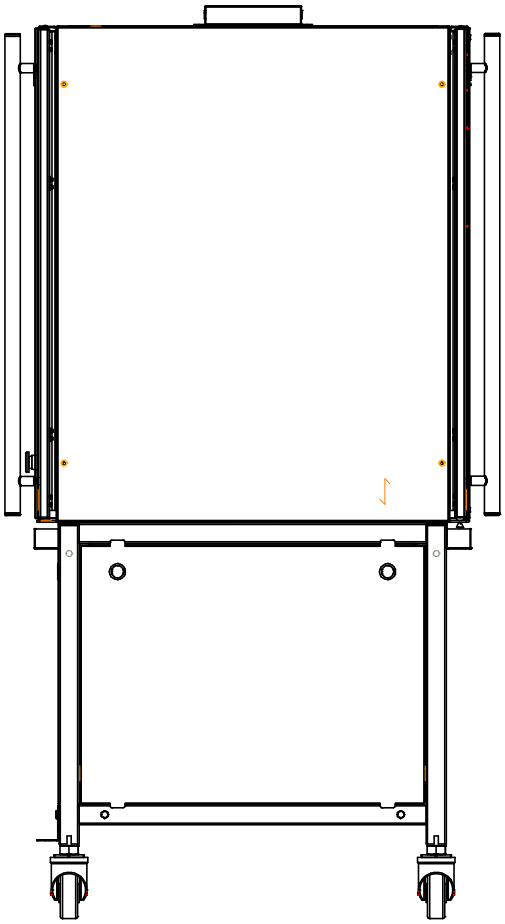
70 7/8
30 3/4