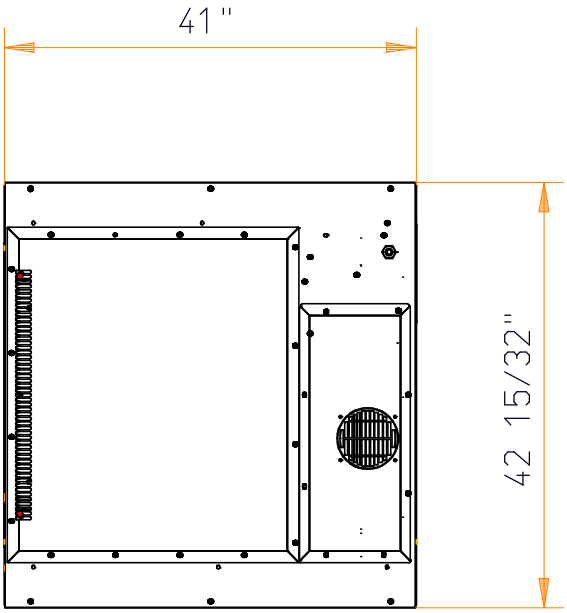
41"
42 15/32"

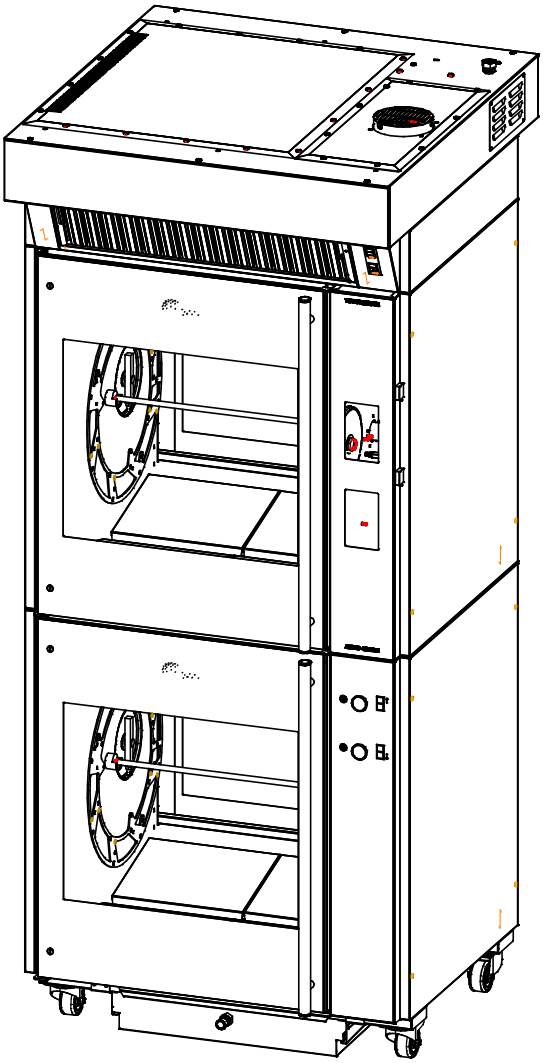

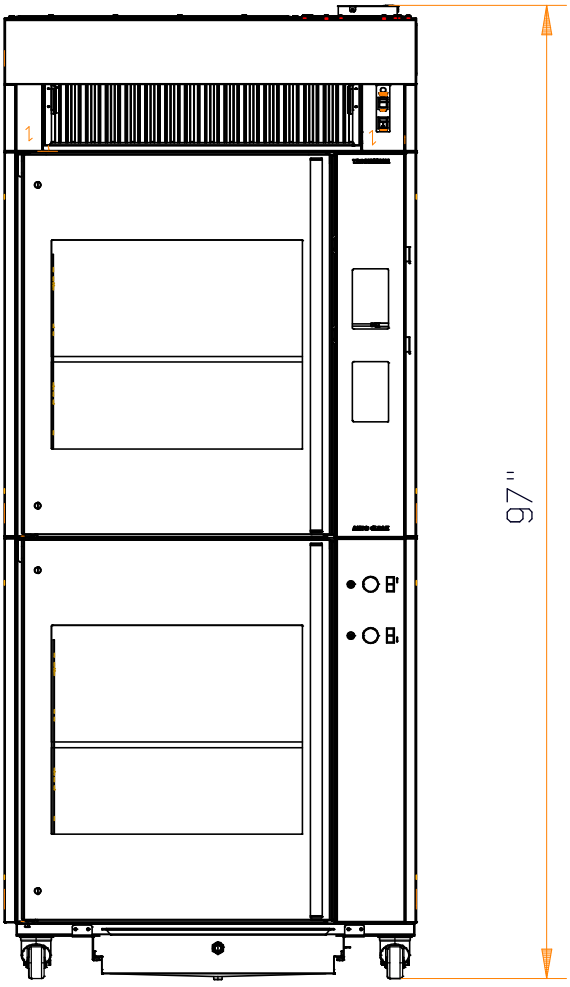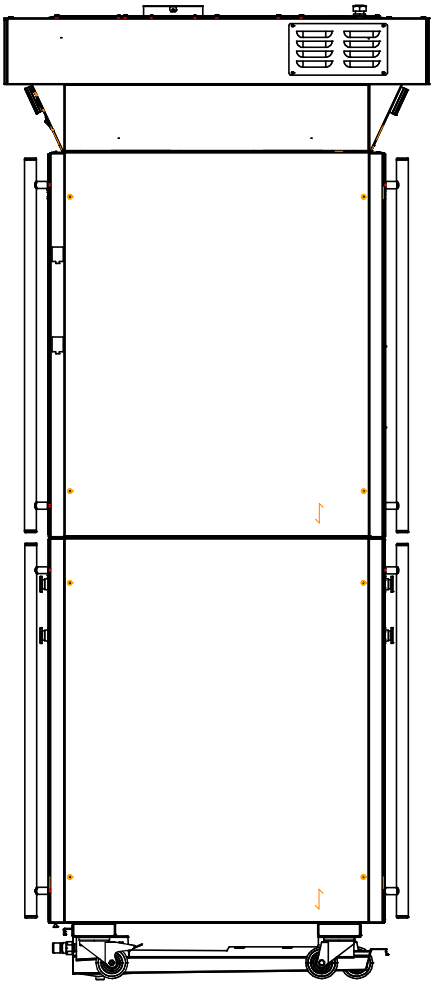
97"