SERVICE INSTRUCTION

Conversion kit for Allen-Bradley relay

9261030 clamp
9261031 relay
9261032 socket

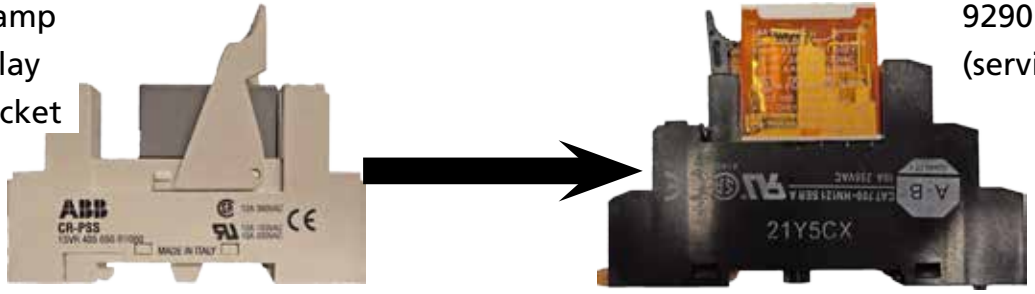

9290114s
(service kit)

Contents service kit 9290114s:

9291140	1x	Relay
9291141	1x	Socket
9124305	This instruction	

- NOTICE -
This manual is prepared for the use of trained Service Technicians and should not be used by those not properly qualified. If you have attended a training for this product, you may be qualified to perform all the procedures in this manual.

This manual is not intended to be all encompassing. If you have not attended a training for this product, you should read, in its entirety, the repair procedure you wish to perform to determine if you have the necessary tools, instruments and skills required to perform the procedure. Procedures for which you do not have the necessary tools, instruments and skills should be performed by a trained technician.

Reproduction or other use of this Manual, without the express written consent of Fri-Jado, is prohibited.

Applied in:

HD Humidified (aut. water filling only). (1x)

TDR Hood USA (1x)

TDR-p / i series (1x)
TDR-p gas (2x)

TRC (3x)

ACR (6x)

Multisserie Deli (2x)

CONVERSION INSTRUCTION ABB TO ALLEN BRADLEY RELAY

==>
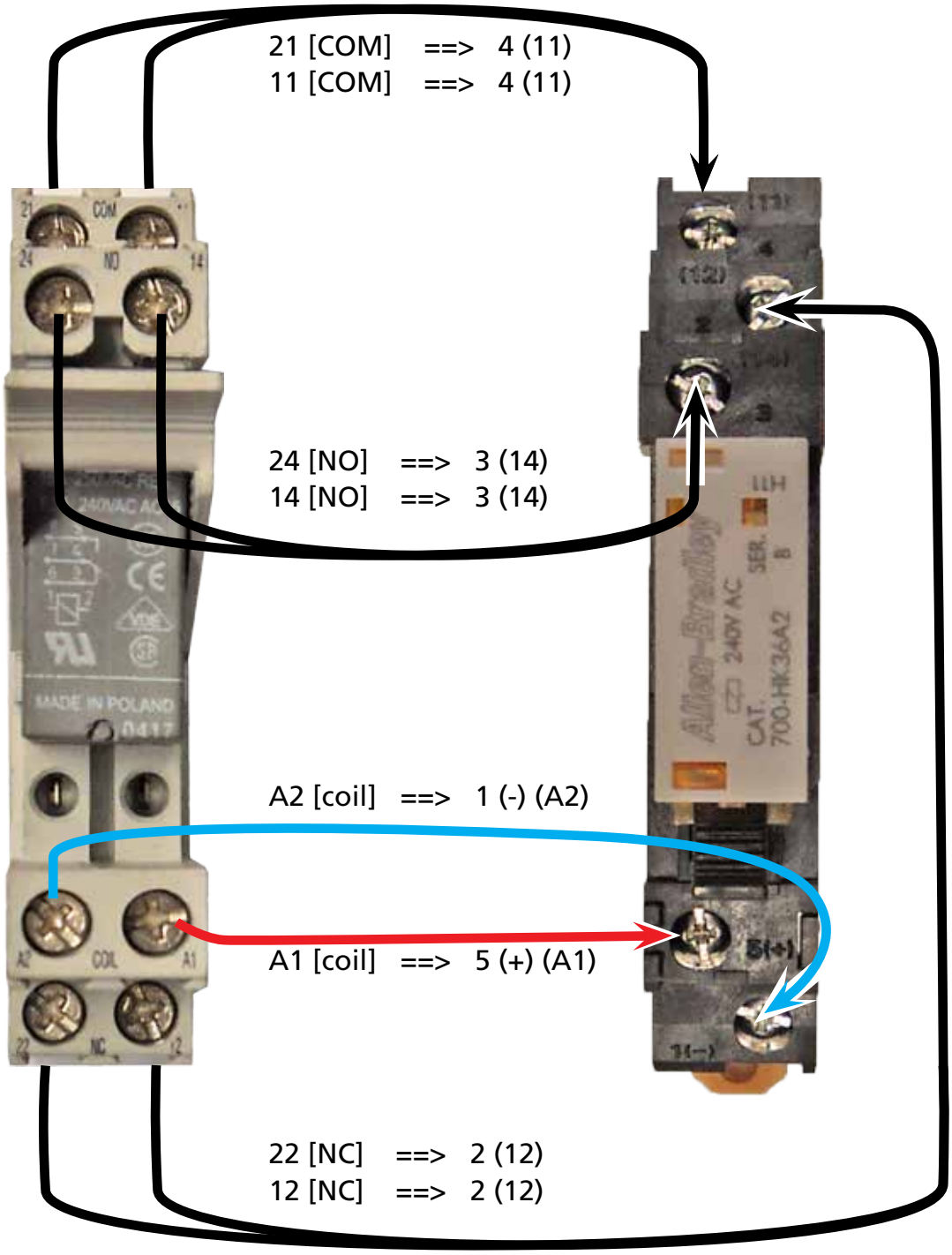
Move the wiring according the overview below.