Mounting a resistor in series with the rinse pump

The serial resistor is meant to reduce the water pressure of the pump in order to increase the lifetime.

The resistor can be applied in different units including stacked units.

WARNING: Disconnect the electrical power to the machine at the main circuit box. Place a tag on the circuit box indicating the circuit is being serviced.

Mounting the resistor

1 Check if the inner screws from the rotor motor are screwed tight, before loosening the outer screws!

2 Mount the resistor on the outer screws of the suspension of the rotor motor, see picture.

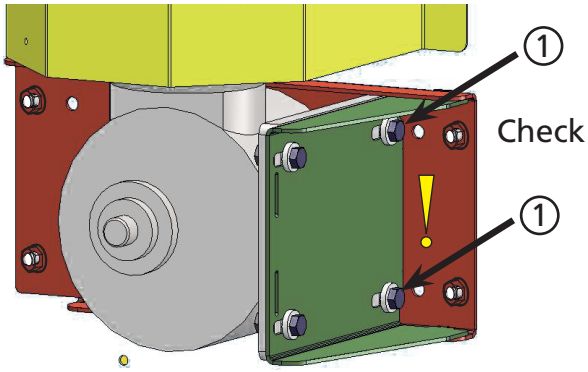

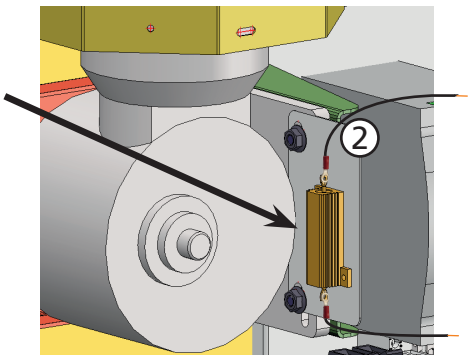

Adjust the voltage

On the power supply, screw the setting fully counter clockwise (CCW)

The voltage wil be ± 23,2 Volt now.

At all cases, the resistor has to be put in series with wire #76.

This wire comes from J61 at the I/O board .

When the unit has one pump, #76 goes to terminal #3 on the terminal block.

When the unit has 2 pumps, #76 goes to the relay next to the terminal block

The arrows on the examples below show the connection points of wire #76

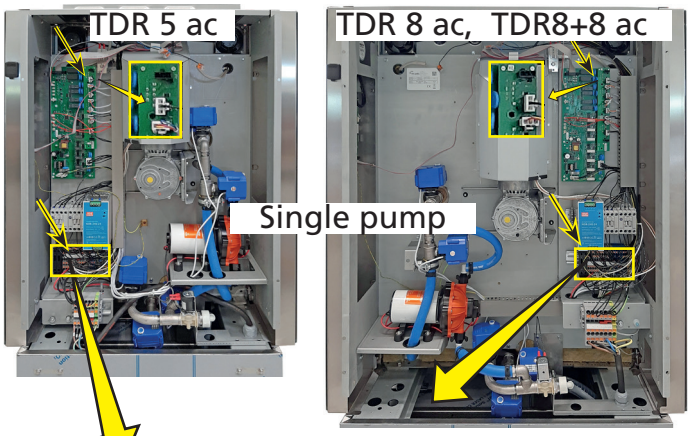

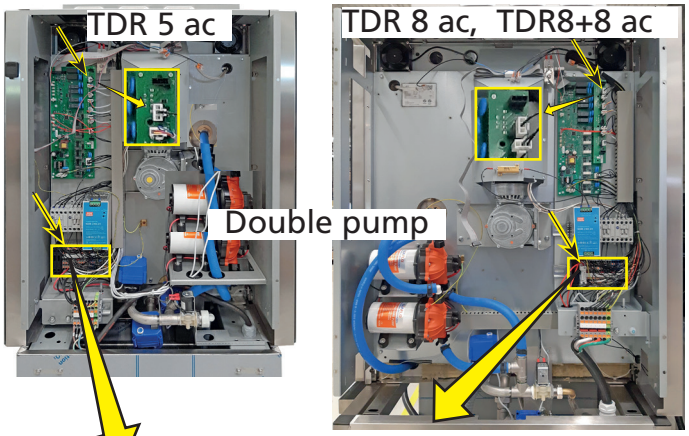

Location of wire #76 at a single pump

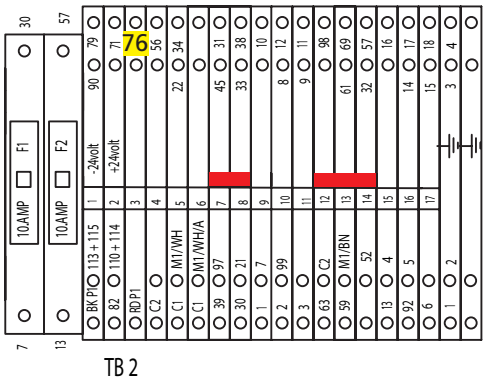

Location of wire #76 at a double pump

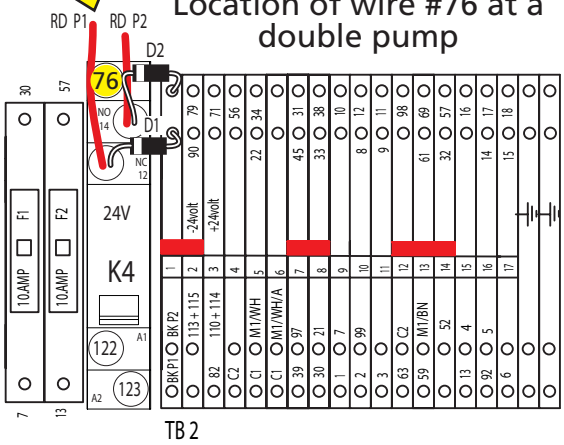

TB2-3 or K4

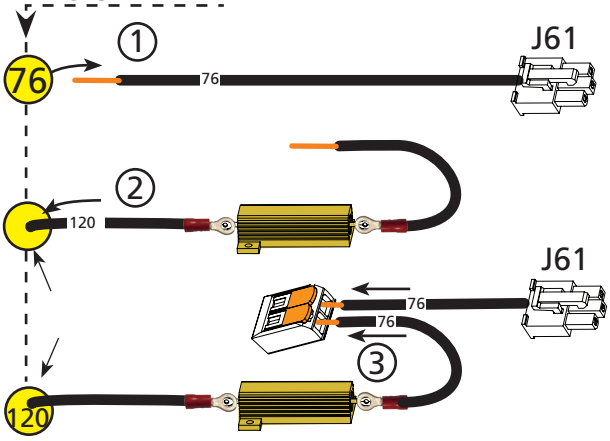

1 Remove wire #76 from terminal TB2-3, or (in case of a double pump) from the K4 relay.

2 Connect wire #120 from the resistor to the point where wire #76 came from.

3 With the 2 pole terminal, connect wire #76 of the resistor to the original wire #76.

Leave the new corresponding diagrams in the unit when finished

New situation

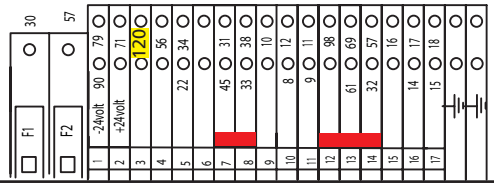

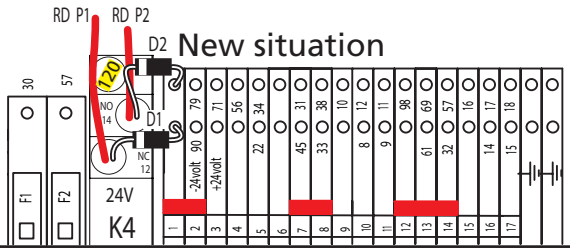

New situation

Electrical diagram TDR ac (single rinse pump)

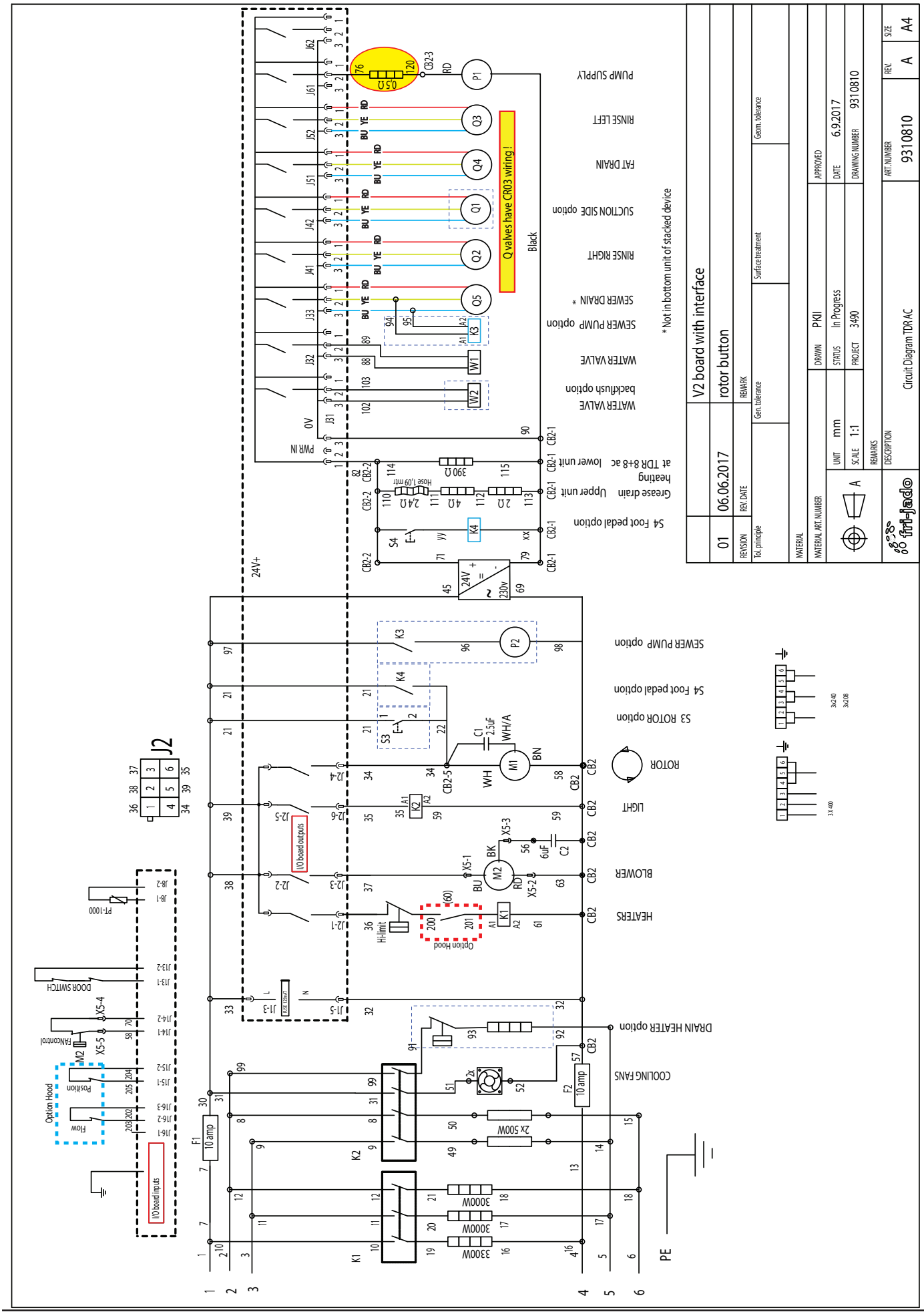

Wiring diagram TDR ac (single rinse pump)

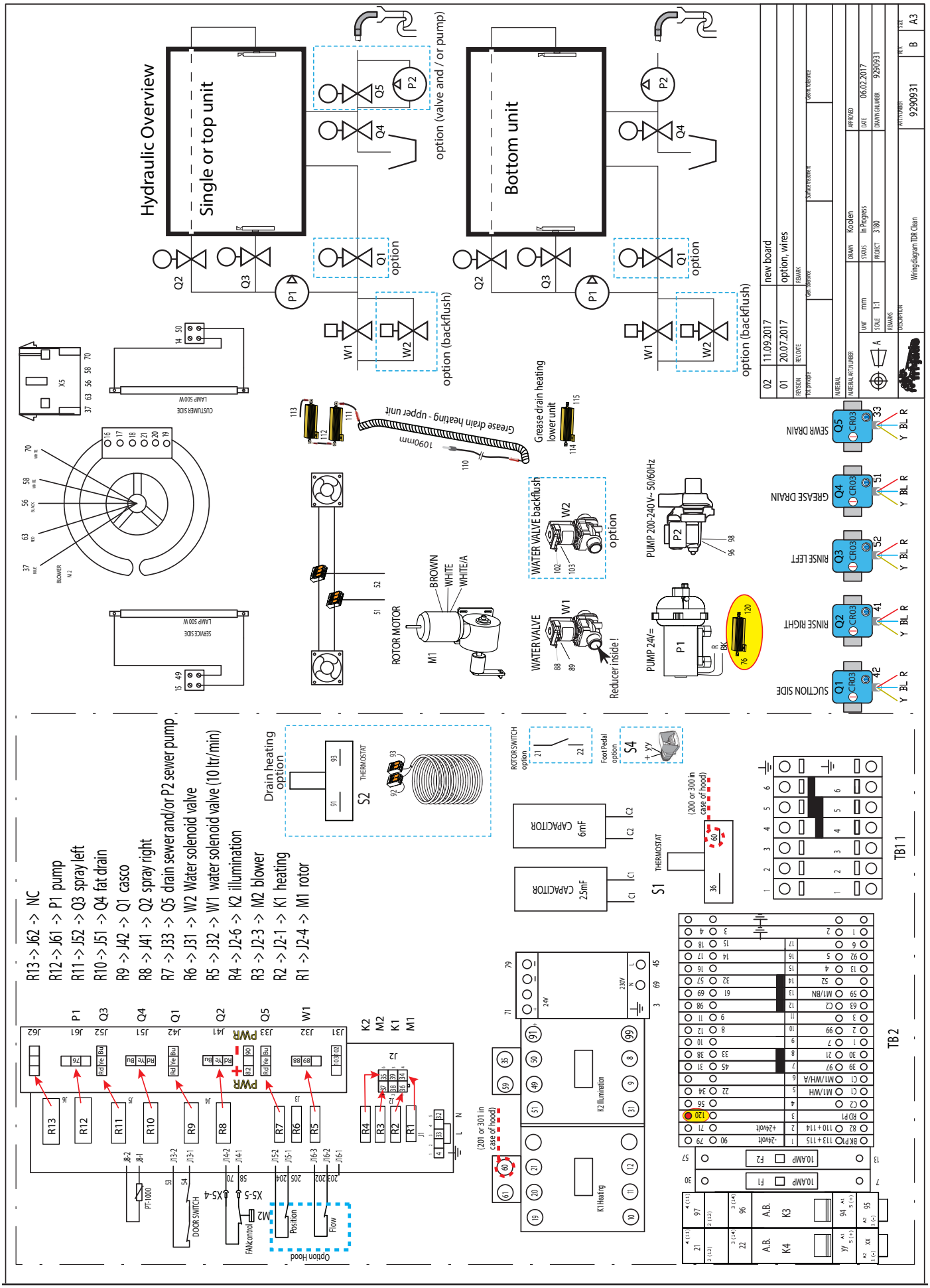

Electrical diagram TDR ac (double rinse pump)

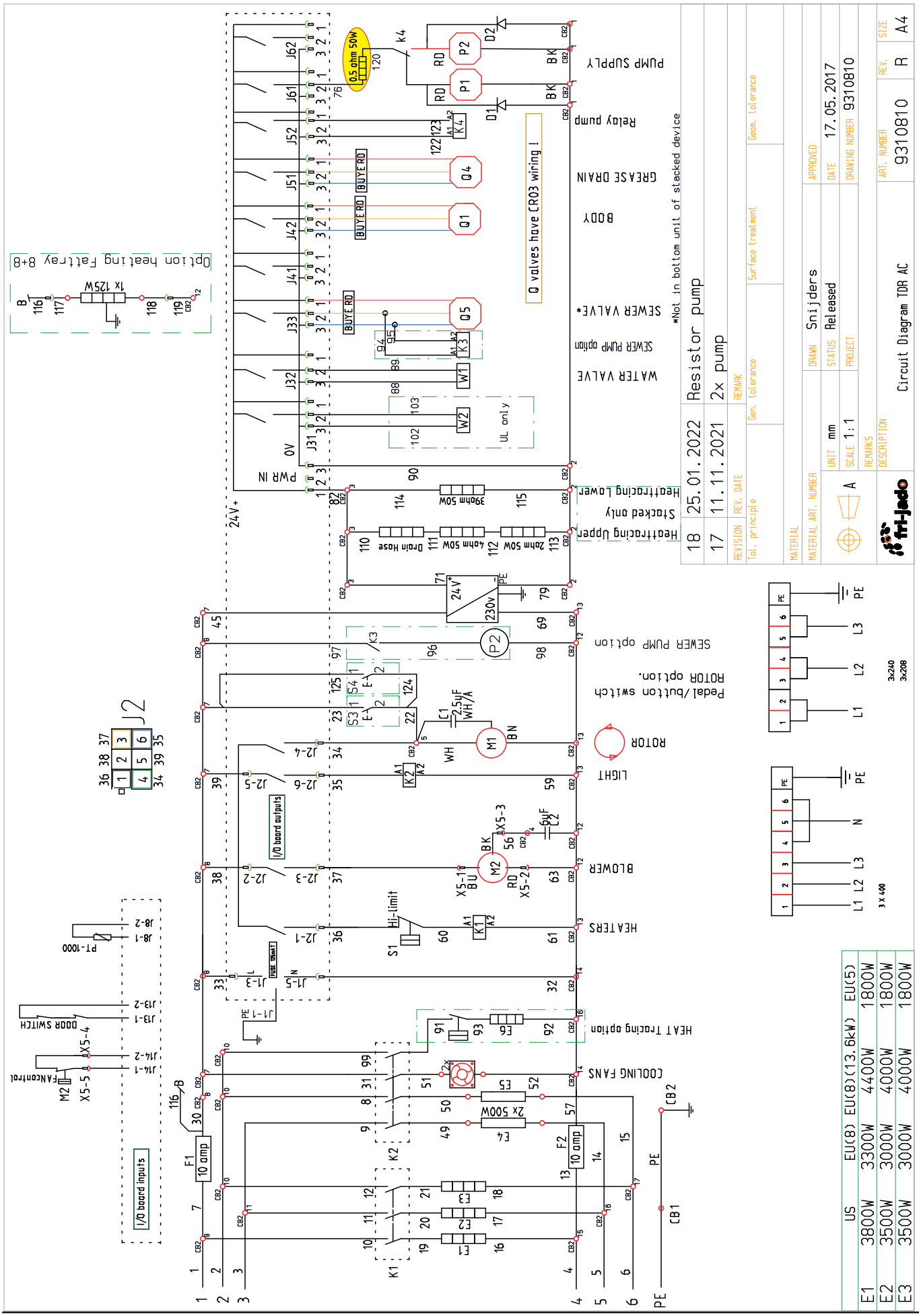
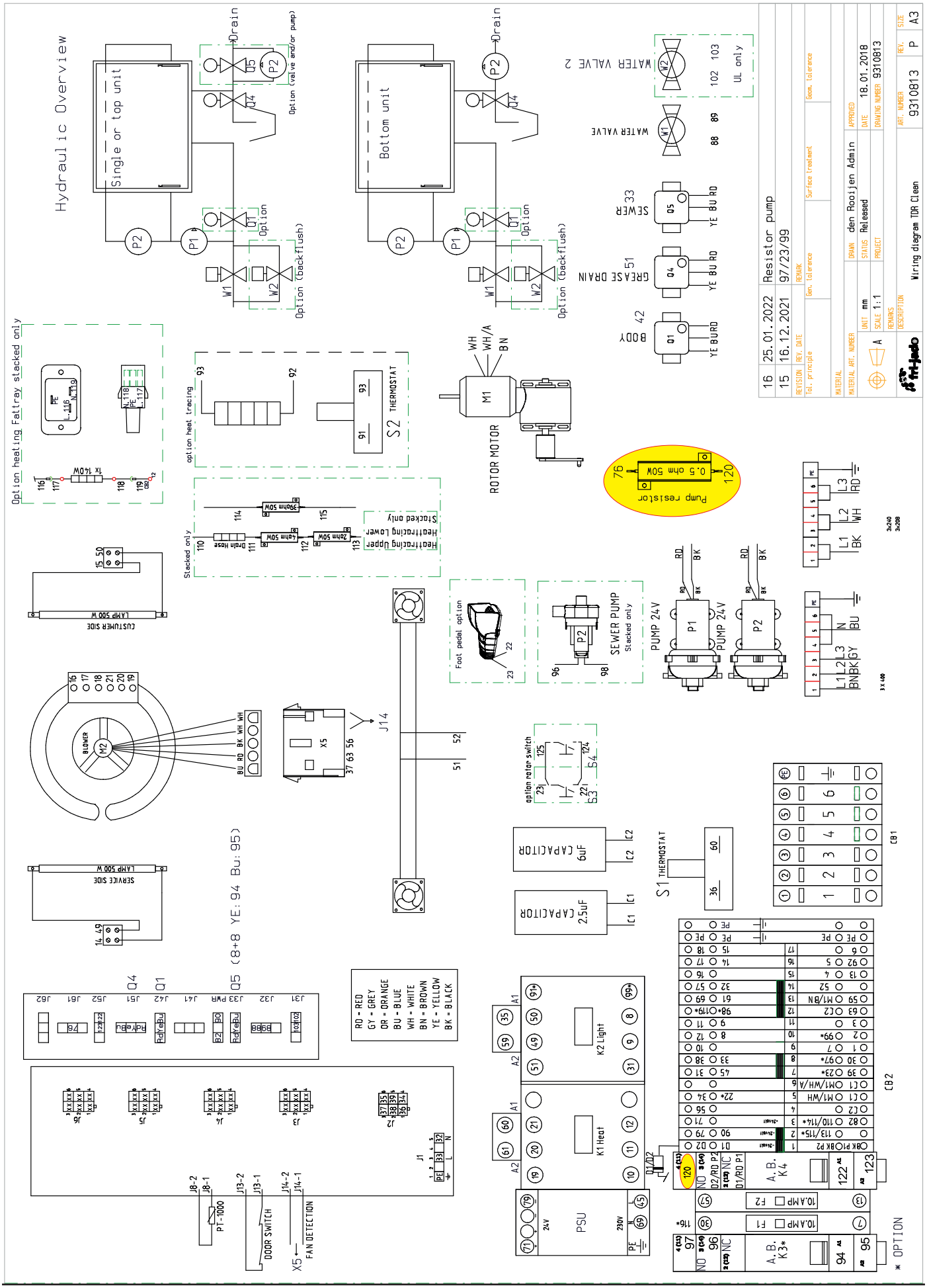
Wiring diagram TDR ac (double rinse pump)