SERVICE INSTRUCTION

Service kit 9310071s, Lamp fixture TDR8i auto-clean

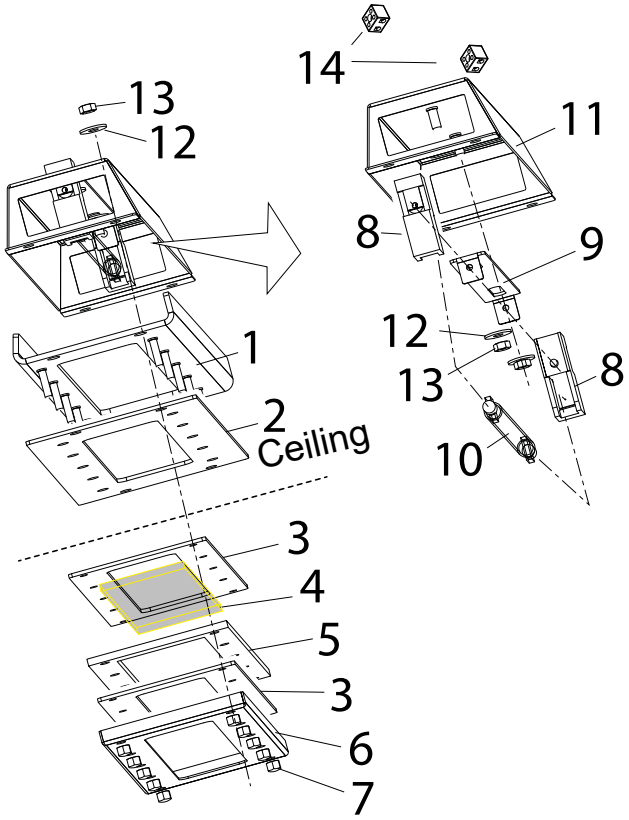

Contents of conversion kit 9318531s

2x the below

#1 9314114 1x Mounting bracket, lamp fixture.
#2 9312054 1x seal, top
#3 9312055 2x seal glass
#4 9312020 1x Glass
#5 9314331 1x Spacer plate
#6 9314330 1x cover, lamp glass
#7 4285408 10x Cap nut
#8 9311015 2x Lamp holder
#9 9314334 1x Bracket, lamp holders
#10 9291001 1x Lamp 500W
#11 9314113 1x Cover, lamp fixture
#12 4311110 6x Washer M5
#13 0142315 6x Nut M5 ss
#14 9171110 1x Terminal block

Extra parts

9172053 10x Nut for sheet metal
4288232 4x Screw M5x12
4280218 4x Screw M5x45
0178617 2mtr Aluminium tape
9311059 1,6 mtr tape

Preface.

This kit replaces the 2 old lamp fixtures completely.

The extra parts can be used if the the rivet nuts from the side panels got damaged.

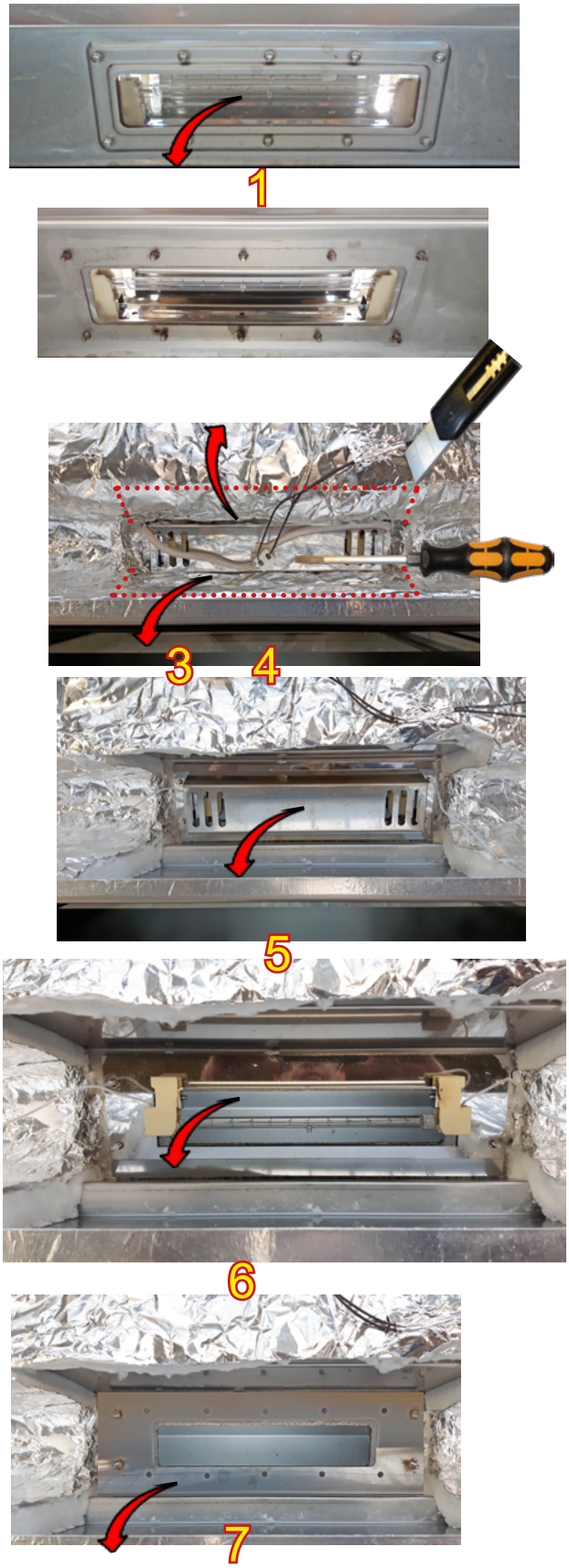

Instruction.

1. Remove the cover profile complete with glas and seal.
2. Remove both side panels and the top plate of the rotisserie.
3. Disconnect the lamp wires from the connector
4. Cut the insulation as shown and take it out.
5. Remove the cover of the lamp
6. Remove the lampholder assembly.
7. Remove the reinforcement plate.

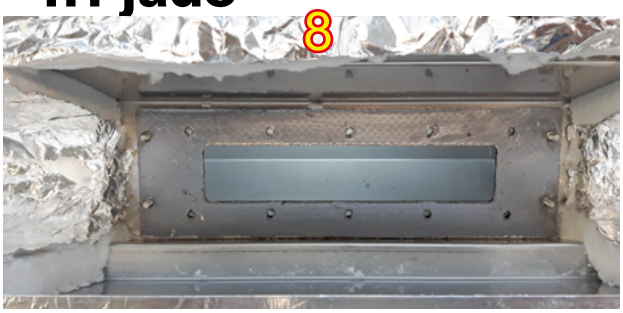

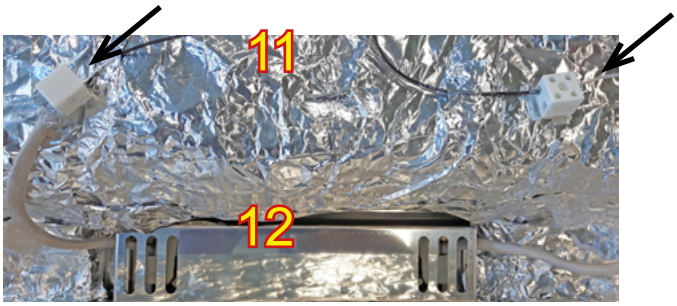

8. Place the large seal.
9. Place the new mounting bracket.
10. Mount the cover assembly with 4 nuts.
11. Put the insulation back in place and use aluminium tape to fixate it.
12. Connect the lamp wiring. Use a separate connection block for each wire.
13. Place one seal.
14. Make a composition of the cover profile, seal, spacer and glas as shown.
15. Slide this composition over the 10 studs and mount with 10 cap nuts
16. Place the tape on the indicated position.
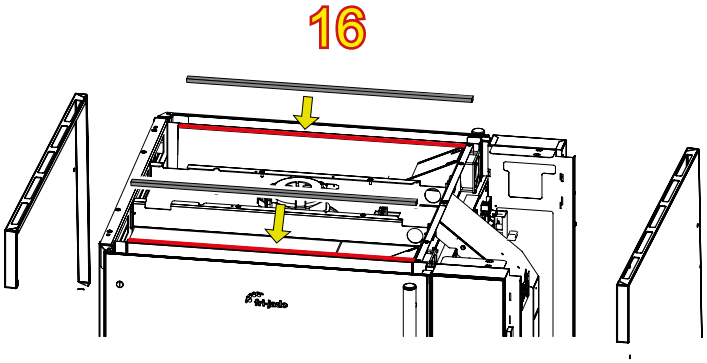
This is to prevent steam coming from the doors from settling above the lamps