SERVICE INSTRUCTION 9124474

Exchange inner door TDR8i ac

Adapting the outer door (if applicable)

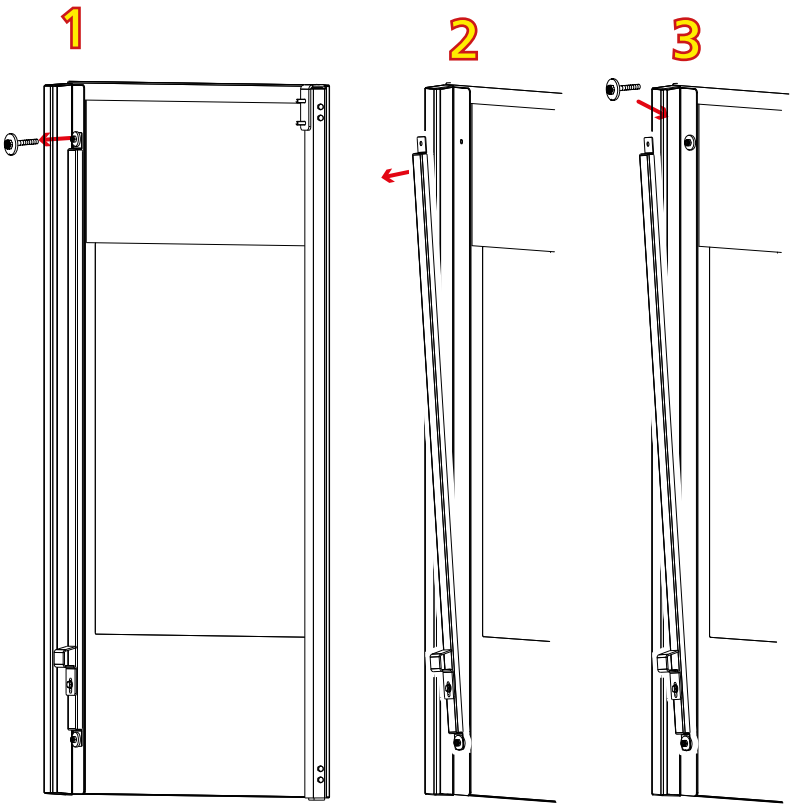

Note that the door on the customer side is mirrored..

1. Unscrew the screw and washer completely.
2. Bend out the profile.
3. Re-fasten the screw with washer.
4. Unscrew the screw and washer completely and remove the profile.
5. Mount the new inner door support. (reuse the screw with washer)
6. Put the support in the lowest position.
7. Drill a 4,5mm hole.
8. Make screw thread with help of the self threadforming screw. Dispose after use.
9. Mount the serrated stainless steel screw. Use threadlocker.

See adjustment on next page

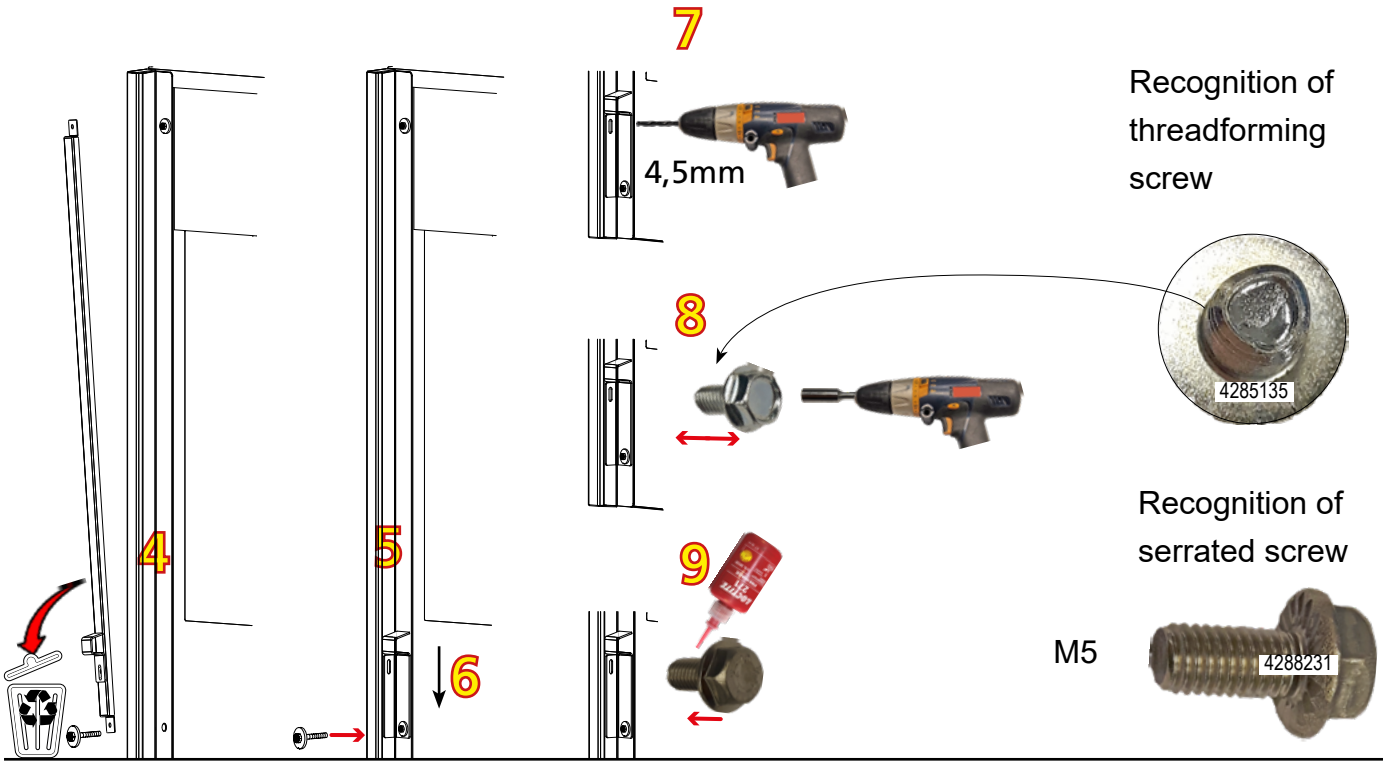

1. Open the outer door 90°.
2. Take out the inner door.
3. Put the support in the lowest position.
4. Put in the new inner door, it is pre-adjusted.
5. Carefully close the door(s). The inner door should just not (or slightly) touch the threshold of the cooking cavity.
6. Open the door at the oposite side and check the position and level of the inner door.
7. Adjust the inner door if necessary.

<u>Adjustment procedure</u>

8. Open the outer door 90°
9. Close the inner door as far as possible.
10. Loosen the 4 bolts of the 2 hinges and slide them upwards to make sure that the door is “sitting”on the threshold of the cooking cavity.
11. Fully slide down the hinges onto the bearings and tighten the bolts.
12. Now put the inner door against the outer door and close it.
13. Open the door at the oposite side and check the position and level of the inner door.
14. Use shims between the door hinges to level the inner door.
15. Re-adjust the height if necessary.
16. Sometimes, it might be necessary to also adjust the top hinge of the outer door.
17. Adjust the support in such way that the inner door passes the threshold of the oven cavity with 0,1 to 0,2 mm play.